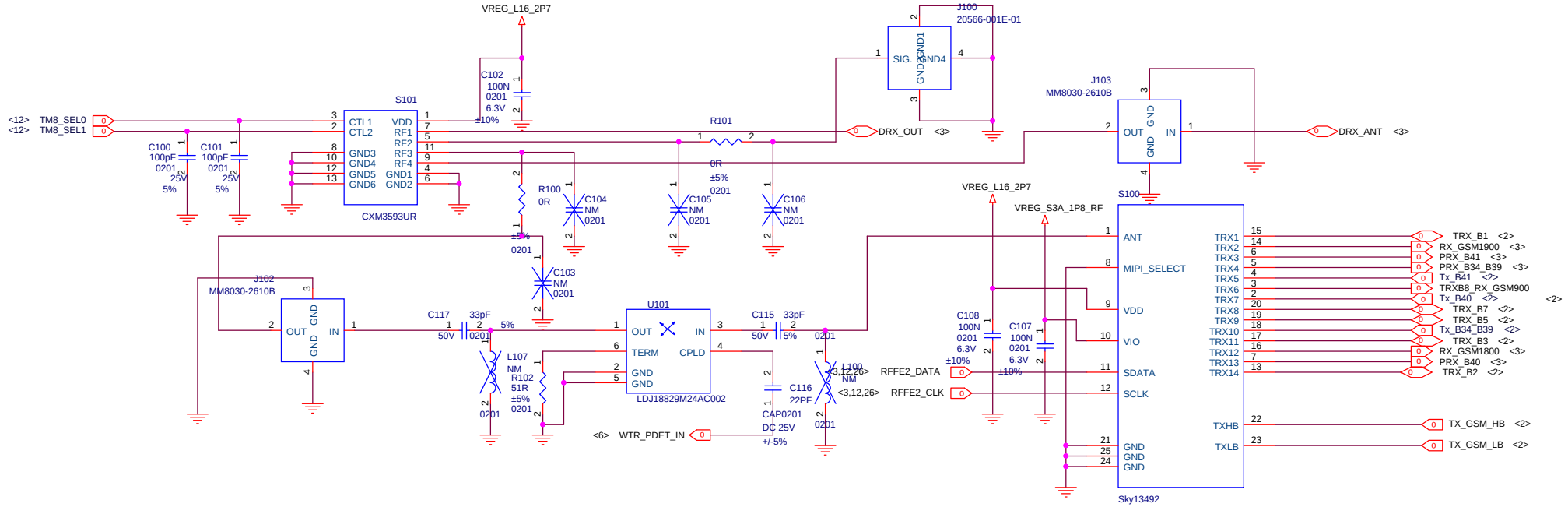

PRIMARY SWITCH(SP16T) LOGIC

Antenna Path	Bit[7]	Bit[6]	Bit[5]	Bit[4]	Bit[3]	Bit[2]	Bit[1]	Bit[0]
Sleep mode (standby)	X	0	0	0	0	0	0	0
2G transmit low band	X	0	0	0	1	0	1	0
2G transmit high band	X	0	0	0	1	0	0	0
TRX1	X	0	0	0	0	1	0	0
TRX2	X	0	0	0	0	1	0	1
TRX3	X	0	0	0	0	1	1	0
TRX4	X	0	0	0	0	1	1	1
TRX5	X	0	0	0	1	0	0	1
TRX6	X	0	0	0	1	0	1	1
TRX7	X	0	0	0	1	1	0	0
TRX8	X	0	0	0	0	0	0	1
TRX9	X	0	0	0	0	0	1	0
TRX10	X	0	0	0	0	0	1	1
TRX11	X	0	0	0	1	1	0	1
TRX12	X	0	0	0	1	1	1	0
TRX13	X	0	0	1	0	0	0	0
TRX14	X	0	0	1	0	0	0	1
Isolation mode (warm–up)	X	1	1	1	1	1	1	1

CXM3593

CTL 1	CTL 2	Active path
L	H	RF1-RF4 RF2-RF3
H	L	RF1-RF3 RF2-RF4

Primary Ant Connector, Coupler and Primary Switchplexer

Title: X5		
Size: A3	Document Number: <Doc>	Rev: P0
Date: Wednesday, April 08, 2015	Sheet 1 of 32	

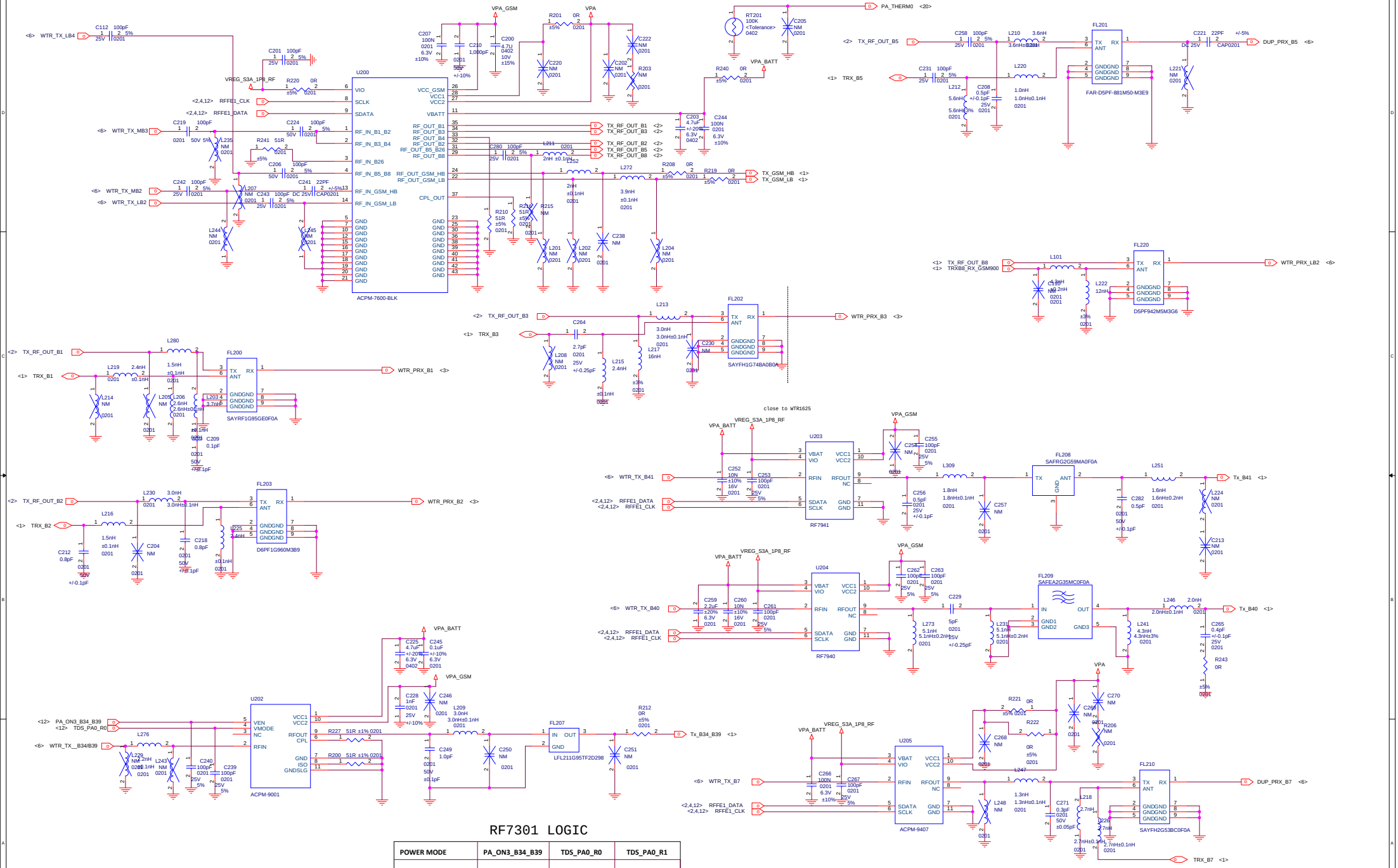

RF7301 LOGIC

POWER MODE	PA_ON3_B34_B39	TDS_PA0_R0	TDS_PA0_R1
POWER DOWN MODE	L	L	L
STANDBY MODE	L	X	X
HIGH POWER STATE	H	L	L
MEDIUM POWER STATE	H	H	L
LOW POWER STATE	H	H	H

Title	X5		
Size A2	Document Number <Doc>		Rev P0
Date: Wednesday, April 08, 2015	Sheet 2 of 32		

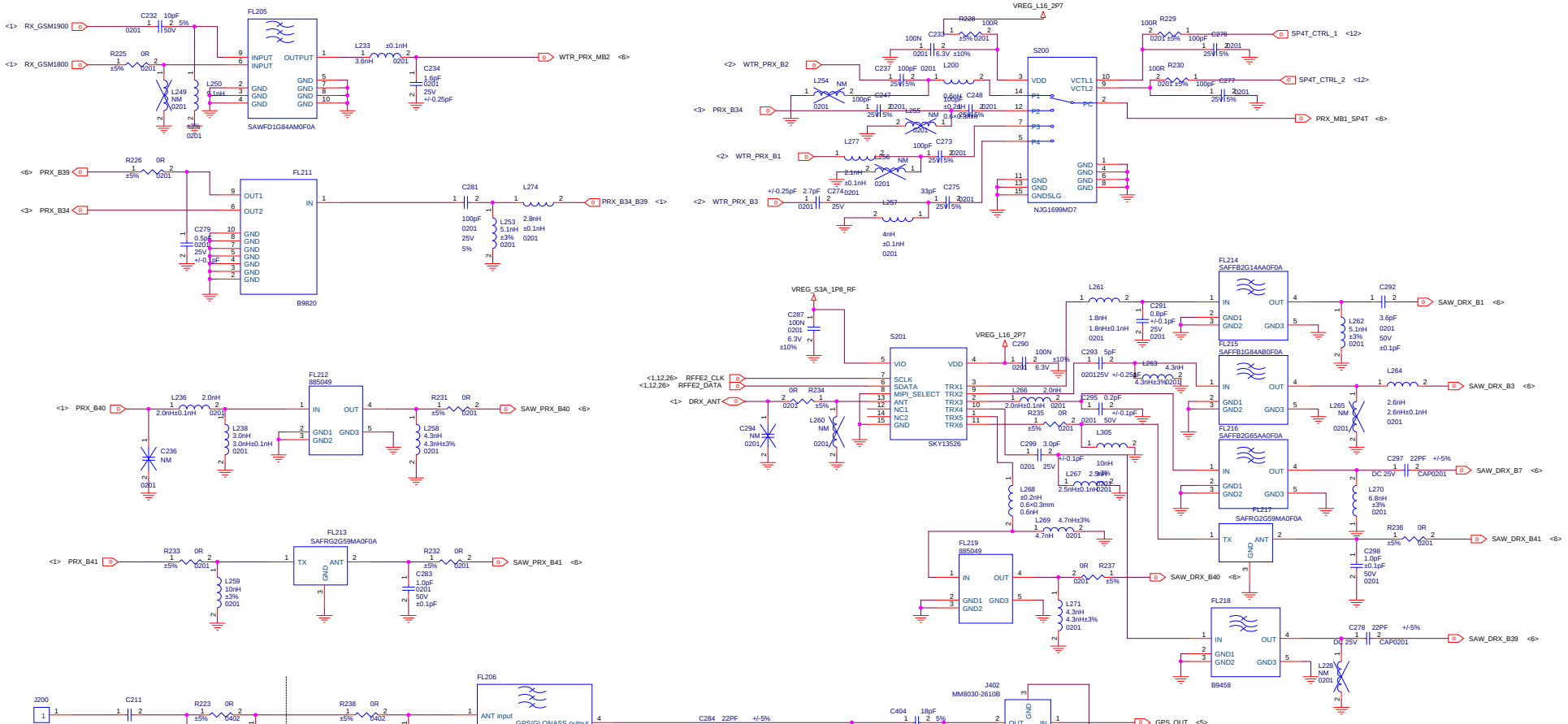

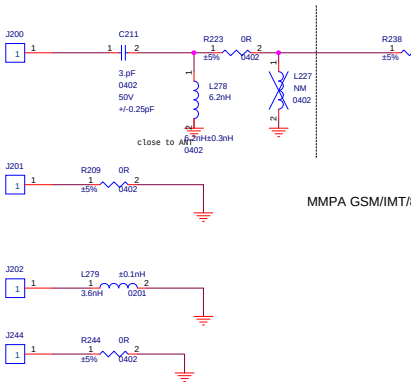

MMPA GSM/IMT/850

PRx and Drx	SP4T_CTRL_1	SP4T_CTRL_2
B2	H	L
B34	L	L
B1	L	H
B3	H	H

Title	X5		
Size A2	Document Number <Doc>		Rev P0
Date: Wednesday, April 08, 2015	Sheet 3 of 32		

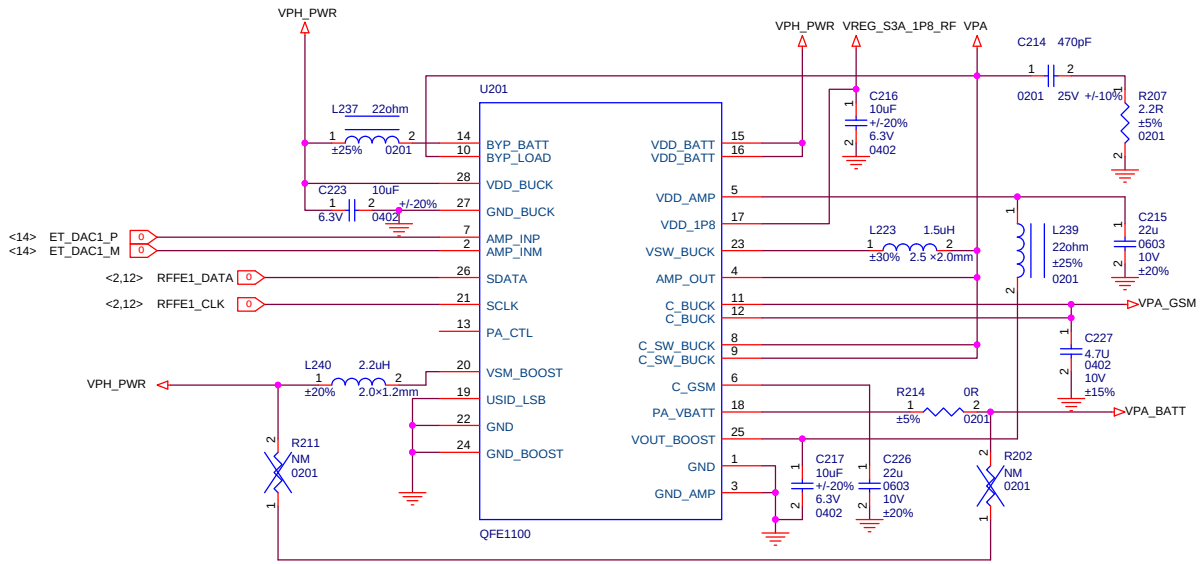

QFE1100

Title	X5	
Size A3	Document Number <Doc>	Rev P0
Date: Wednesday, April 08, 2015	Sheet 4 of 32	

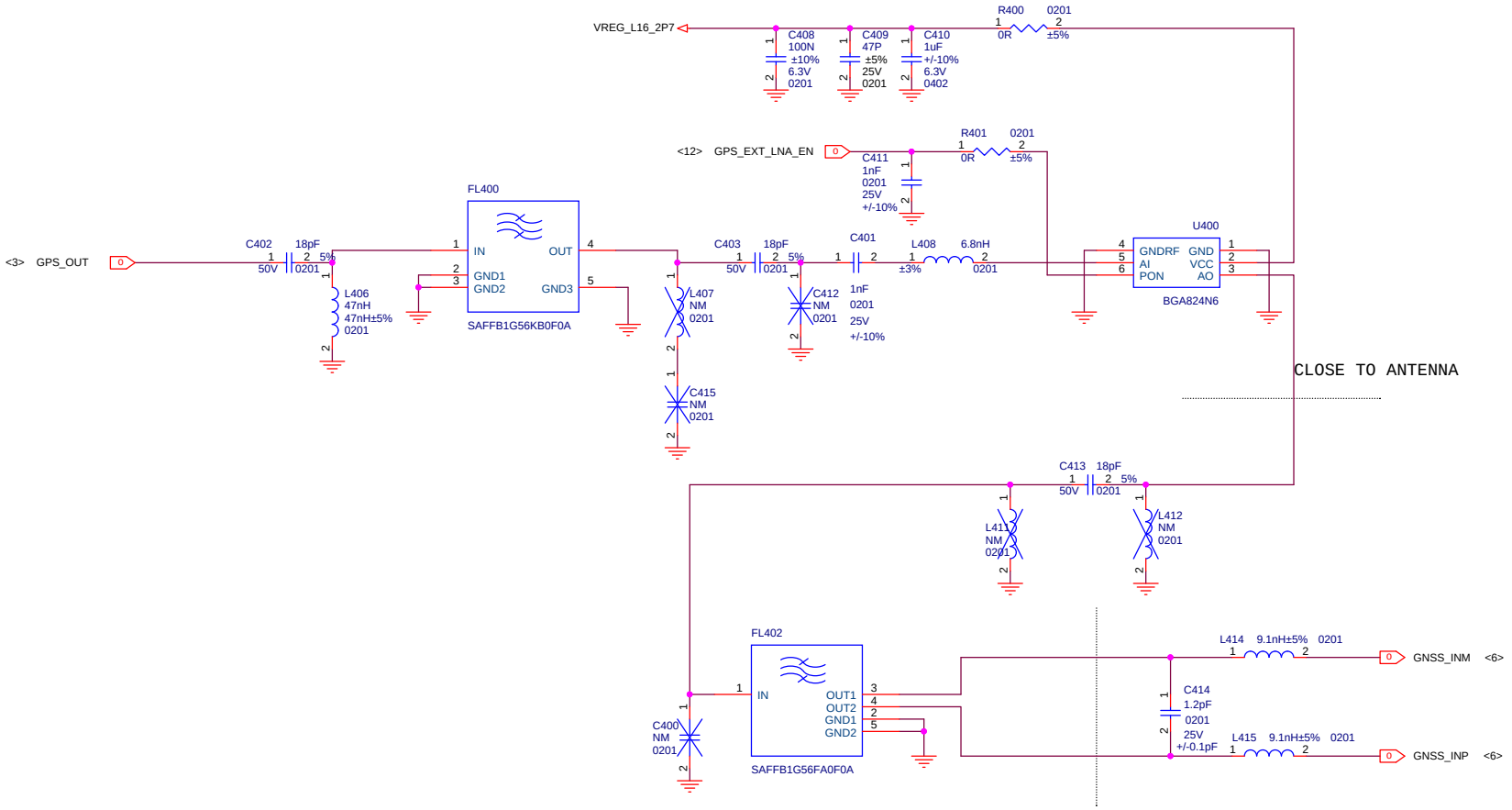

GPS

Title	X5	
Size A3	Document Number <Doc>	Rev P0
Date: Wednesday, April 08, 2015	Sheet 5 of 32	

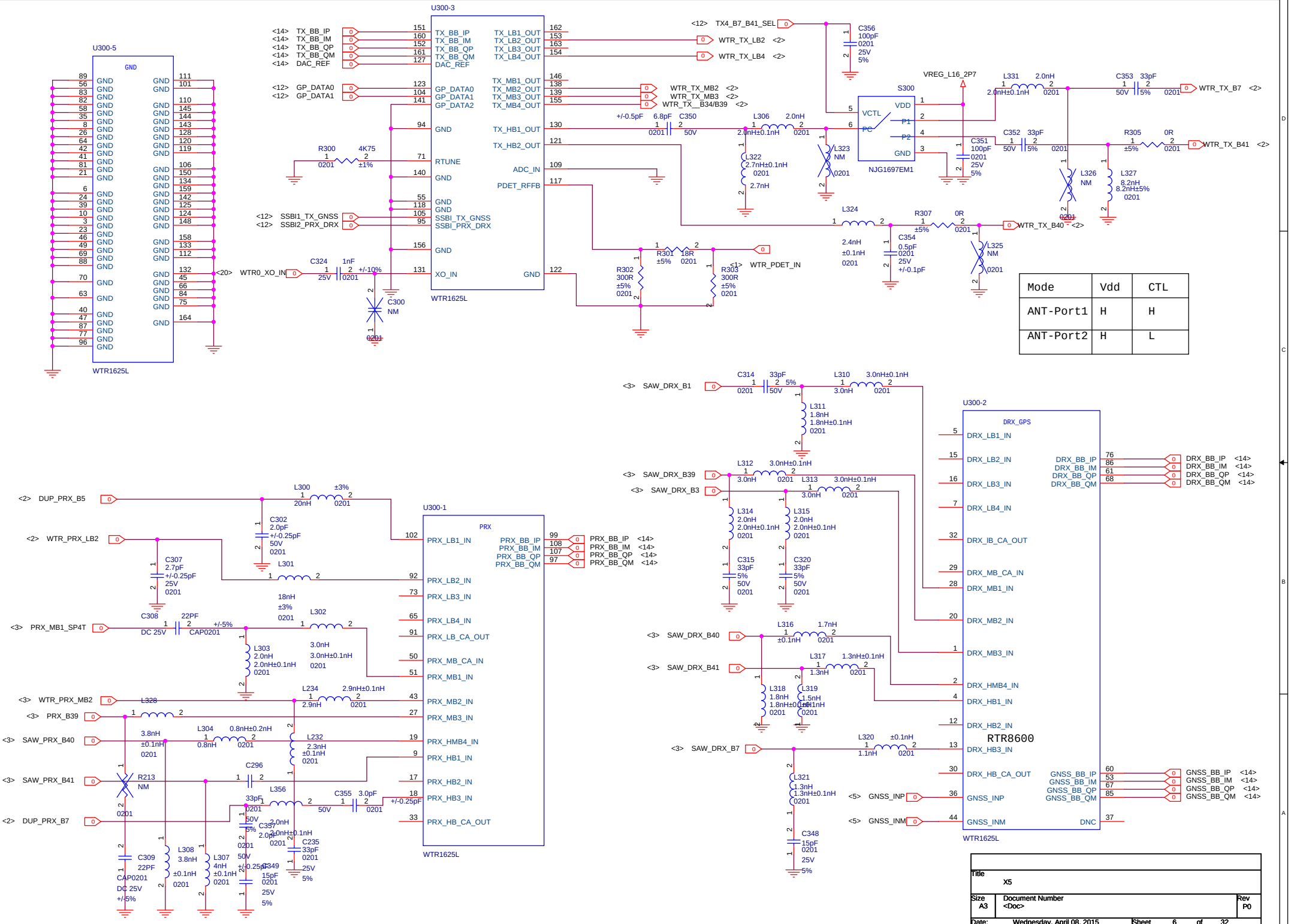

Mode	Vdd	CTL
ANT-Port1	H	H
ANT-Port2	H	L

Title	X5	
Size A3	Document Number <Doc>	Rev P0
Date: Wednesday, April 08, 2015	Sheet 6 of 32	

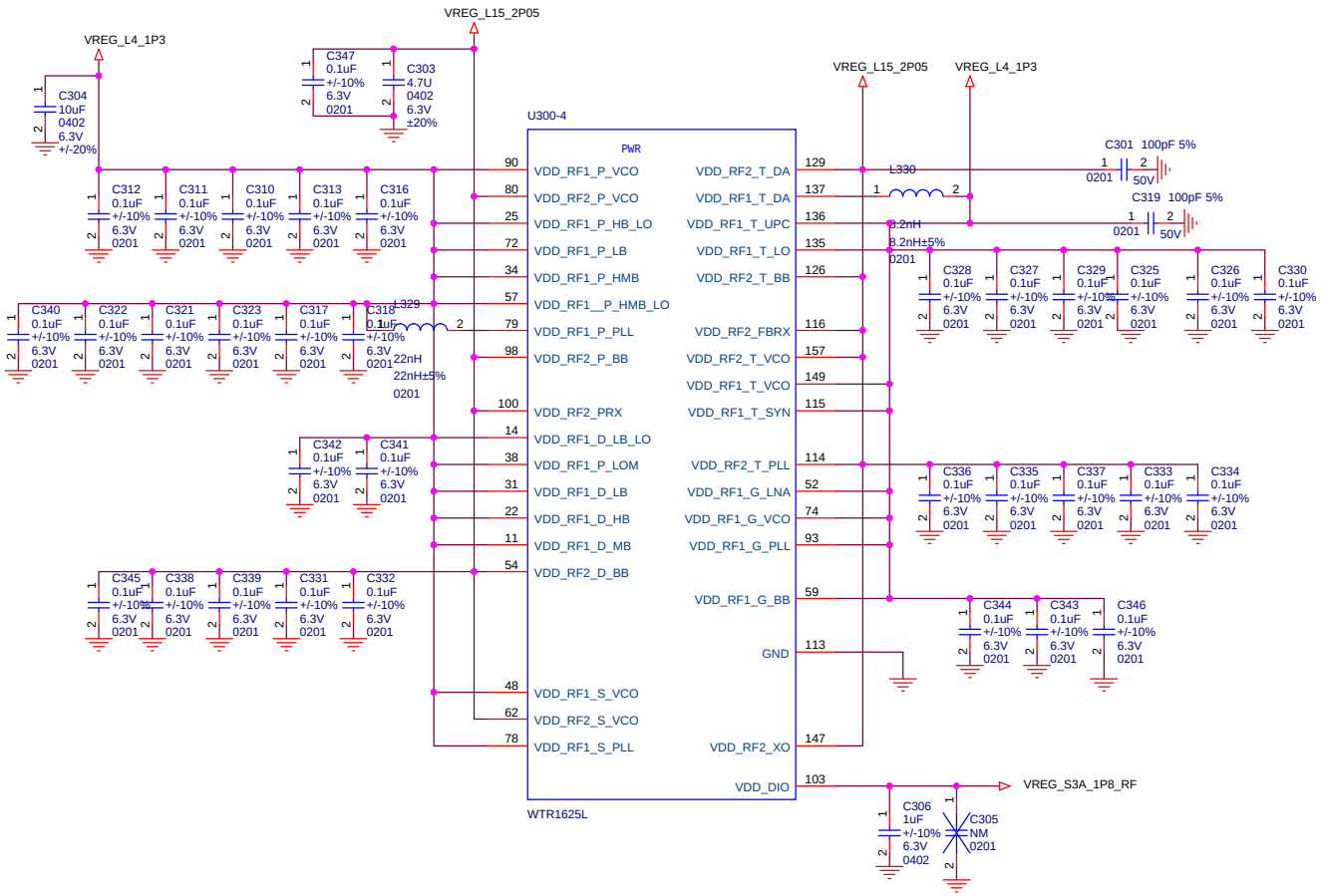

GROUP	NAME	PIN	NET
1	VDD_RF2_D_BB	54	VREG_L15_2P05
2	VDD_RF2_T_DA	129	
3	VDD_RF2_P_BB VDD_RF2_T_BB	98 126	
4	VDD_RF2_P_VCO VDD_RF2_S_VCO VDD_RF2_T_VCO	80 62 157	
5	VDD_RF2_T_PLL	114	
6	VDD_RF2_XO	147	
7	VDD_RF2_FBRX	116	
8	VDD_RF2_PRX	100	
9	VDD_RF1_P_PLL VDD_RF1_S_PLL VDD_RF1_S_VCO VDD_RF1_P_VCO	79 78 48 90	VREG_L4_1P3
10	VDD_RF1_T_DA	137	
11	VDD_RF1_T_VCO VDD_RF1_T_SYN	149 115	
12	VDD_RF1_T_LO VDD_RF1_T_UPC	135 136	
13	VDD_RF1_P_HB_LO	25	
14	VDD_RF1_D_LB	31	
15	VDD_RF1_P_LB	72	
16	VDD_RF1_D_LOM	38	
17	VDD_RF1_D_LB_LO	14	
18	VDD_RF1_D_MB	11	
19	VDD_RF1_D_HB	22	
20	VDD_RF1_P_HMB_LO	57	
21	VDD_RF1_P_HMB	34	
22	VDD_RF1_G_LNA VDD_RF1_G_BB	52 59	
23	VDD_RF1_G_PLL VDD_RF1_G_VCO	93 74	
24	VDD_DIO	103	VREG_S3A_1P8_RF

RTR8600 BYPASS

Title	X5	
Size A3	Document Number <Doc>	Rev P0
Date: Wednesday, April 08, 2015	Sheet 7 of 32	

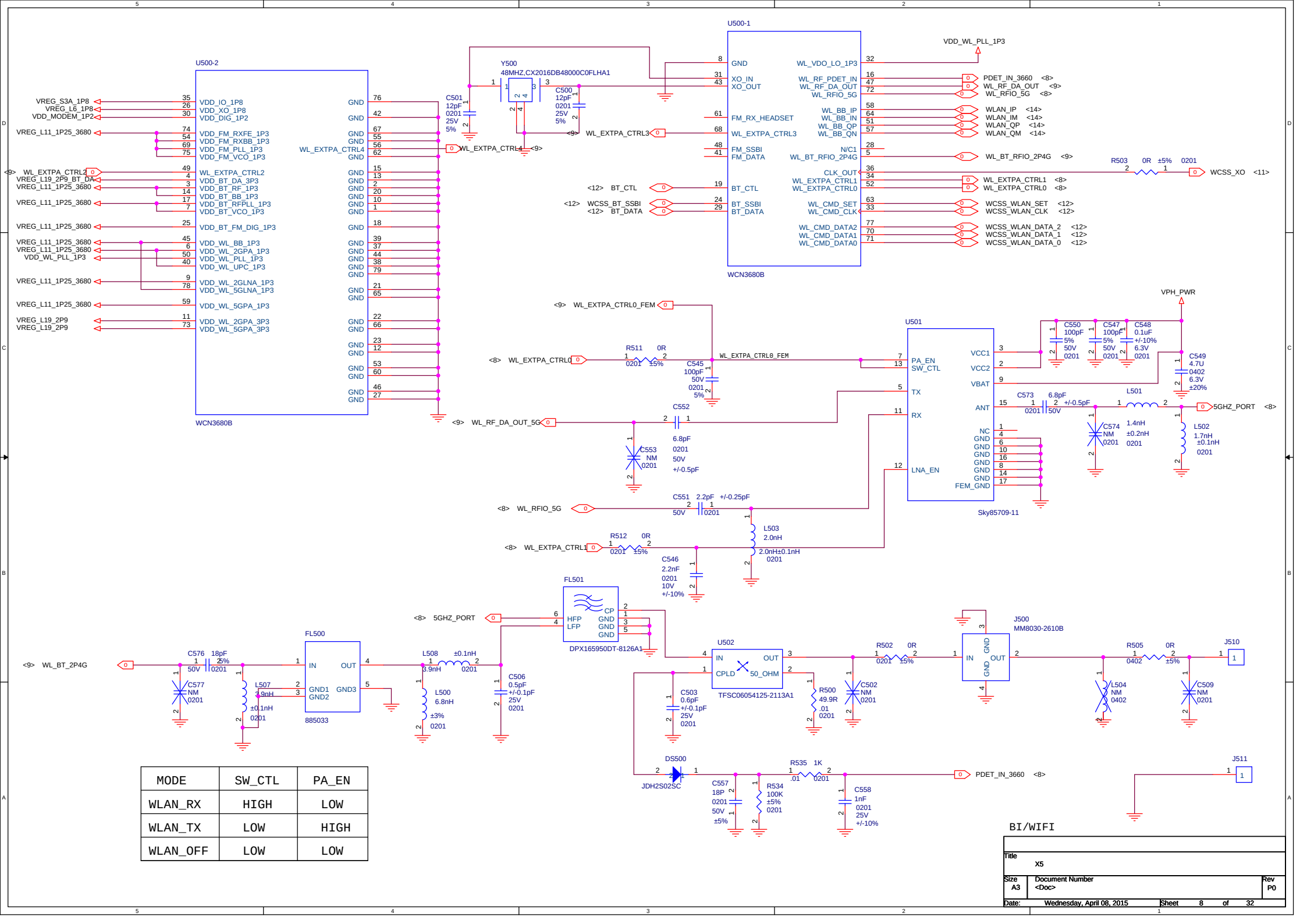

MODE	SW_CTL	PA_EN
WLAN_RX	HIGH	LOW
WLAN_TX	LOW	HIGH
WLAN_OFF	LOW	LOW

BI/WIFI

Title	X5	
Size A3	Document Number <Doc>	Rev P0
Date: Wednesday, April 08, 2015	Sheet 8 of 32	

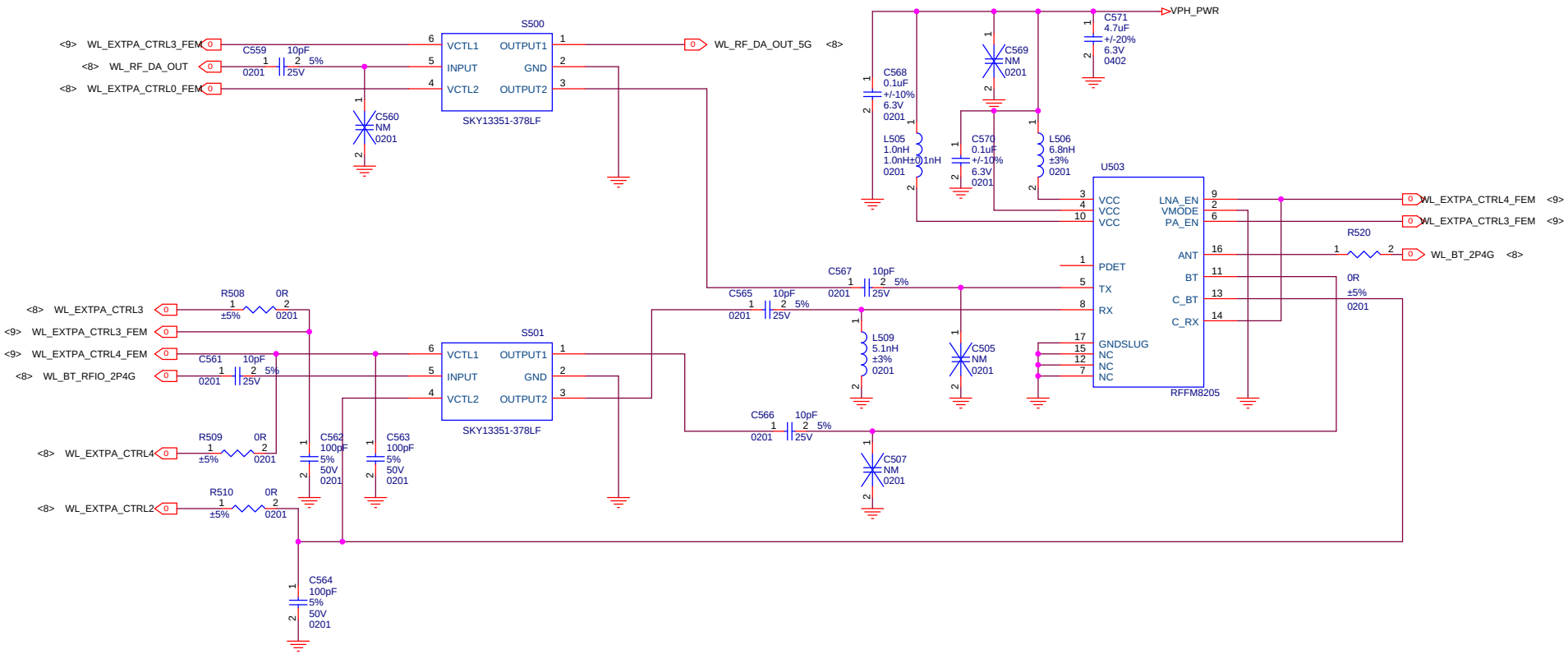

Title	X5	
Size A3	Document Number <Doc>	Rev <RevCode>
Date: Wednesday, April 08, 2015	Sheet 9 of 32	

Voltage	Pad name	Pad no.	Max curre
1P3	VDD_BT_FM_DIG_1P3	25	1
	VDD_BT_BB_1P3	14	1
	VDD_BT_PLL_1P3	17	8
	VDD_BT_RXRF_1P3	3	10
	VDD_BT_VCO_1P3	7	8
	VDD_FM_PLL_1P3	69	16
	VDD_FM_RXBB_1P3	54	
	VDD_FM_RXFE_1P3	74	
	VDD_FM_VCO_1P3	75	
	VDD_WL_2GLNA_1P3	9	10
	VDD_WL_2GPA_1P3	6	85
	VDD_WL_5GLNA_1P3	78	
	VDD_WL_5GPA_1P3	59	155
	VDD_WL_BB_1P3	45	10
	VDD_WL_LO_1P3	32	8
	VDD_WL_PLL_1P3	50	10
	VDD_WL_UPC_1P3	40	30
1P8	VDD_XO_1P8	26	2
	VDD_IO_1P8	35	1
3P0	VDD_FM_TXDA_3P0	49	16
	VDD_WL_2GPA_3P0	11	560
	VDD_WL_5GPA_3P0	73	600
	VDD_BT_TXRF_3P0	4	45
1P2	VDD_DIG_1P2	30	4

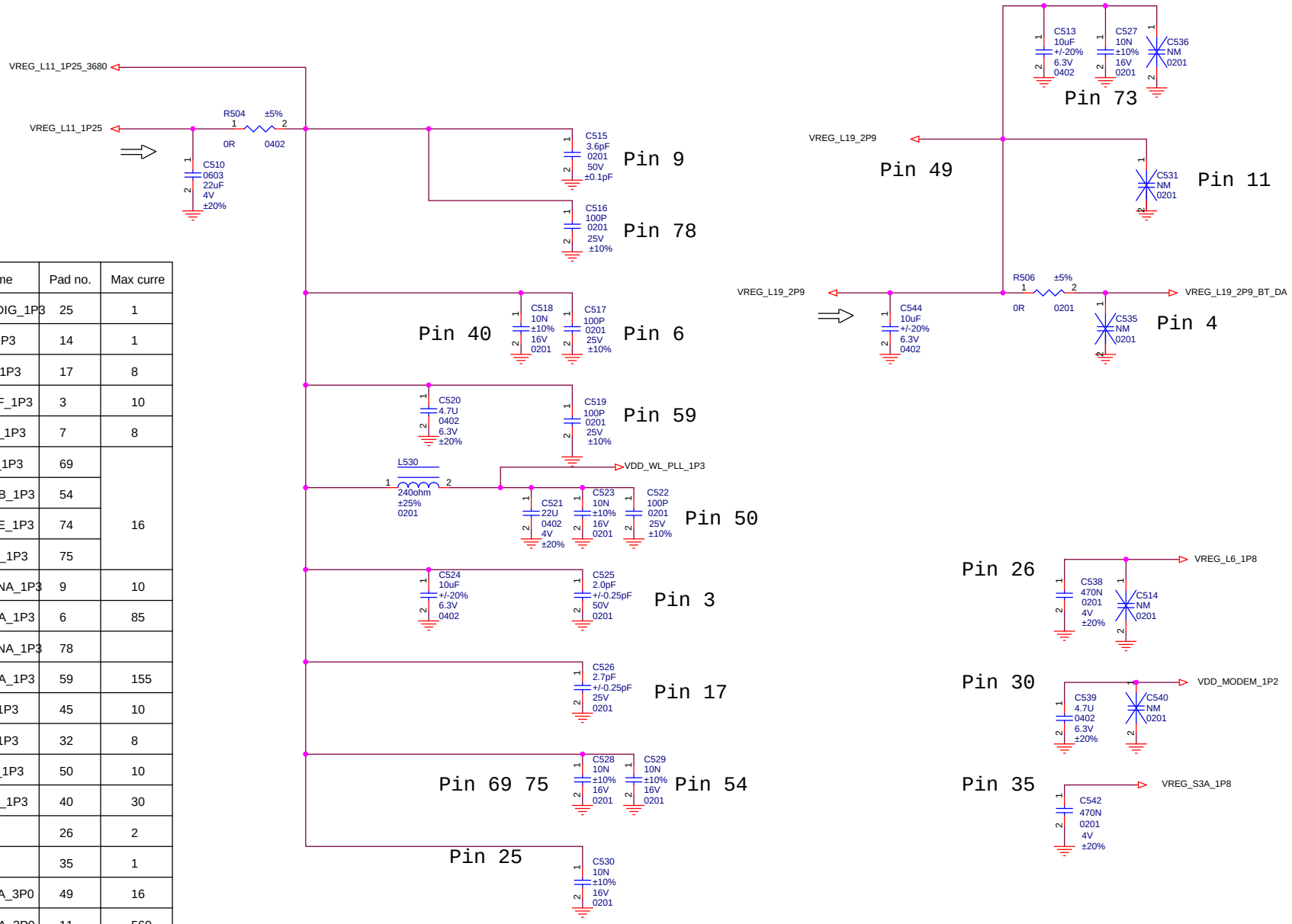

BT/FM/WLAN DECOUP

Title	X5	
Size A3	Document Number <Doc>	Rev P0
Date: Wednesday, April 08, 2015	Sheet 10 of 32	

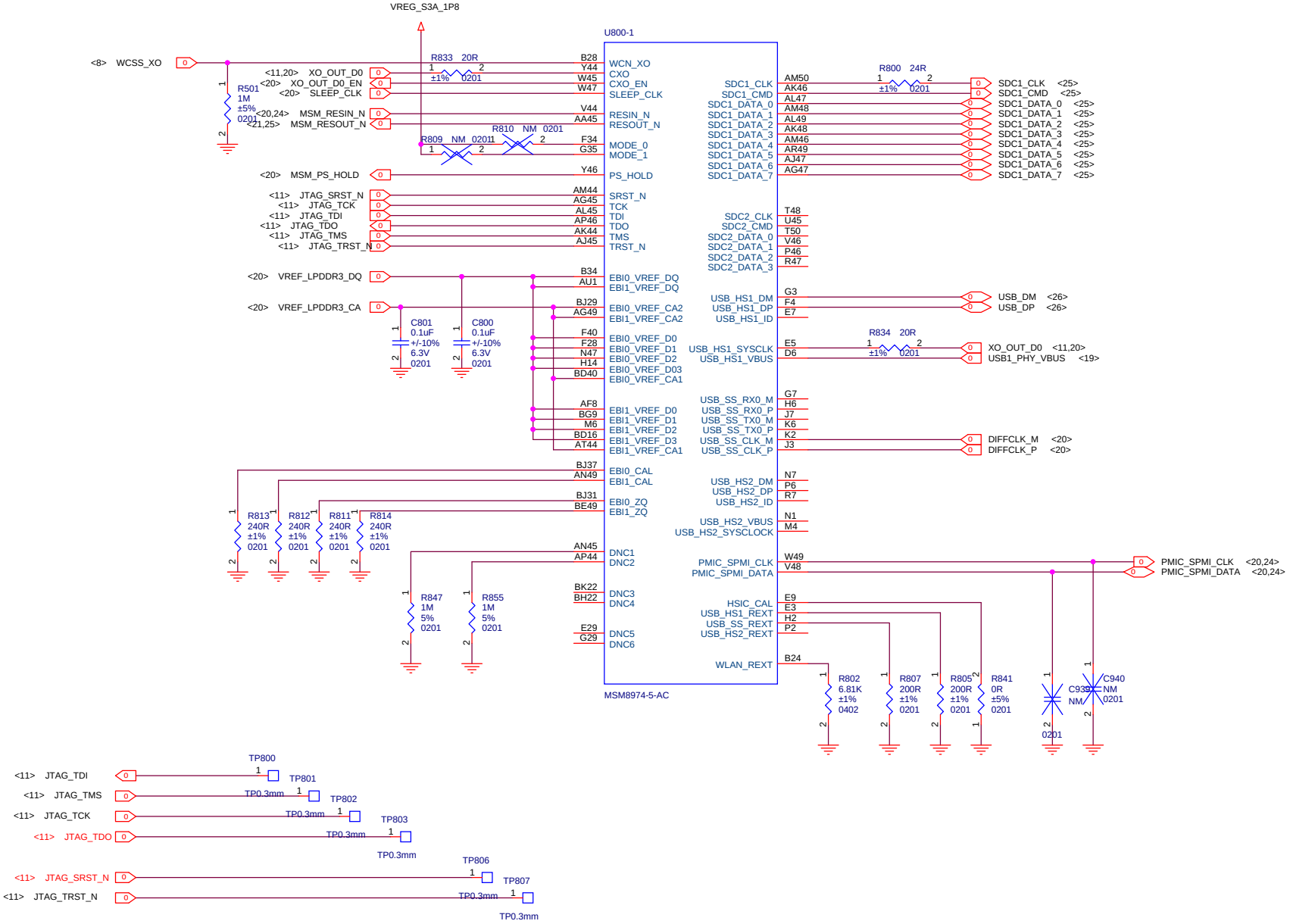

MSM8974 (1 OF 8) - CONTROL

Title	X5	
Size A3	Document Number <Doc>	Rev P0
Date: Wednesday, April 08, 2015	Sheet 11 of 32	

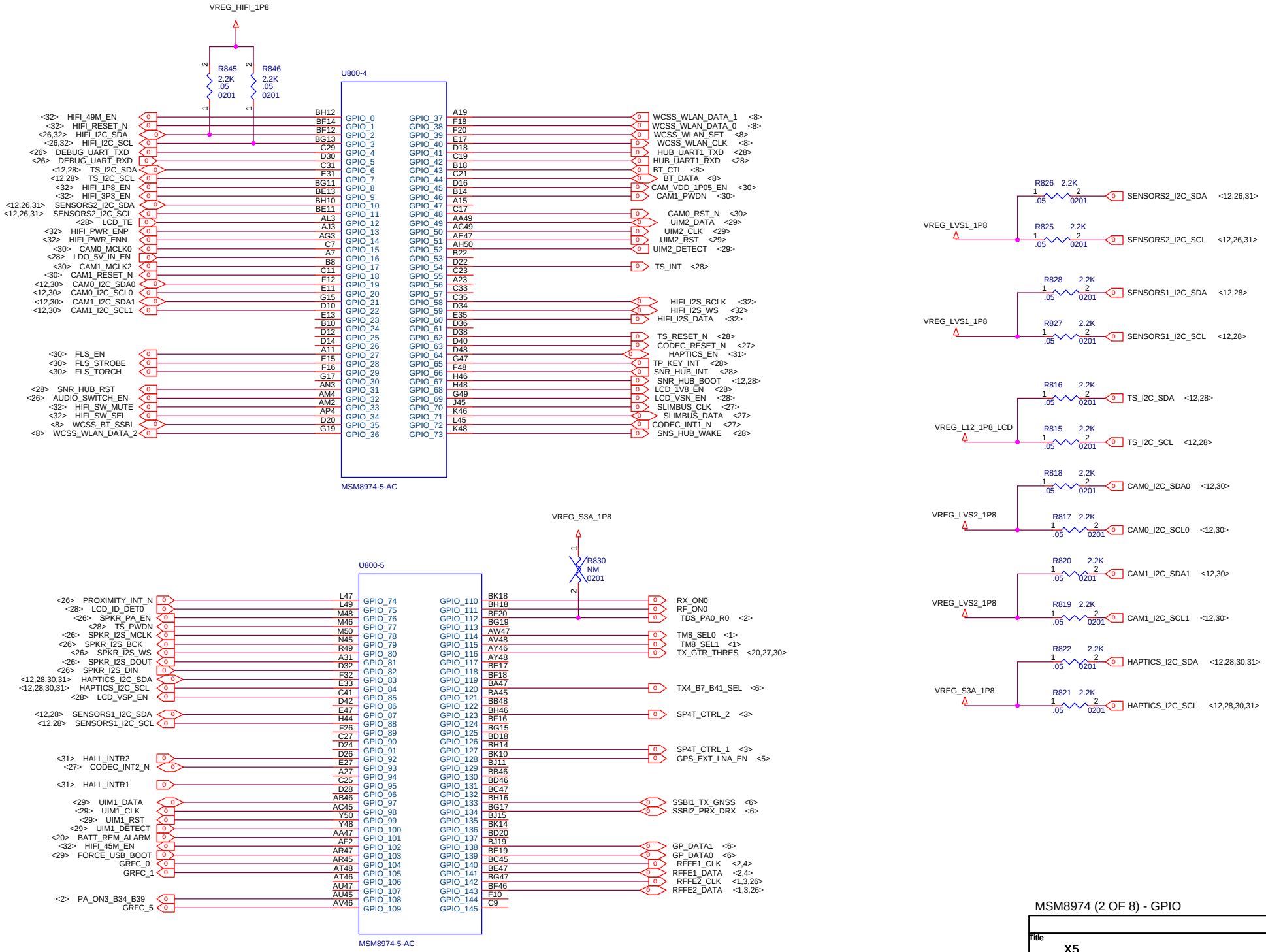

MSM8974 (2 OF 8) - GPIO

Title	X5	
Size A3	Document Number <Doc>	Rev P0
Date: Wednesday, April 08, 2015	Sheet 12 of 32	

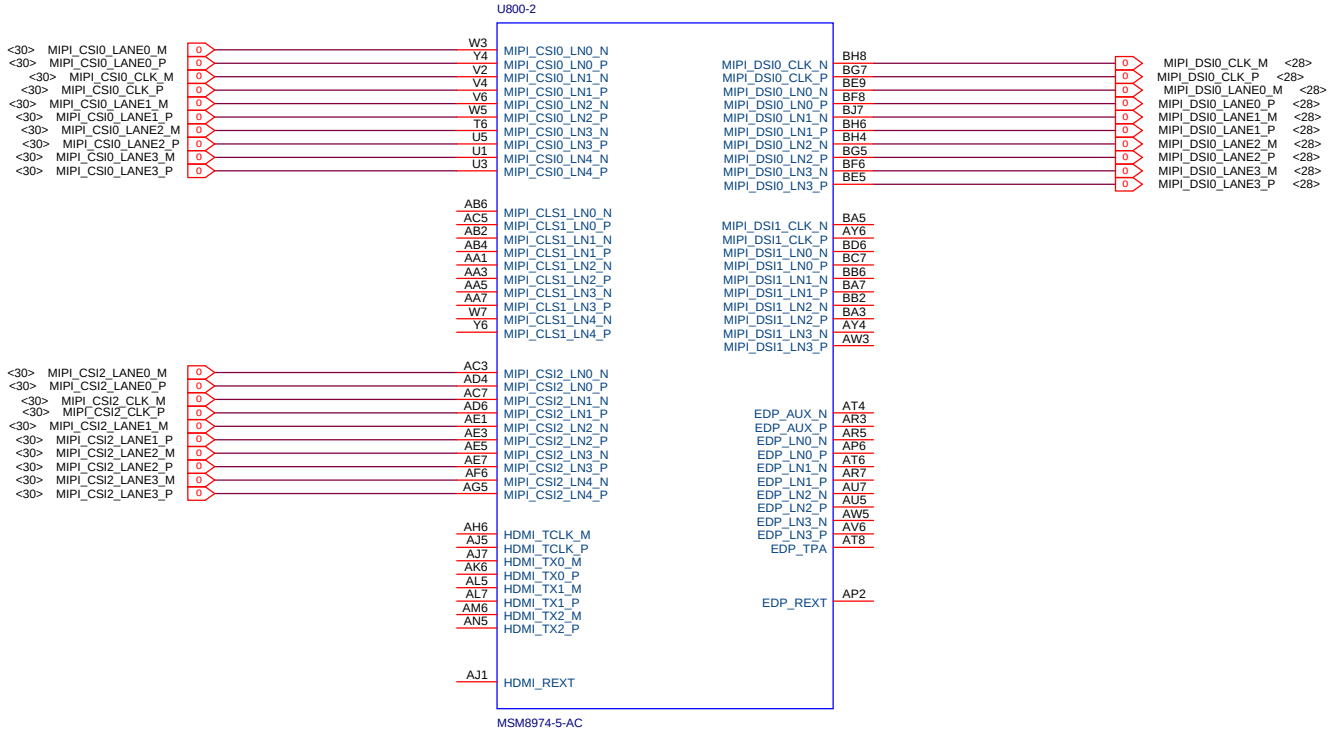

MSM8974 (3 OF 8) - MSM8974 MIPI DSI,CSI and HDMI

Title	X5	
Size A3	Document Number <Doc>	Rev P0
Date: Wednesday, April 08, 2015	Sheet 13 of 32	

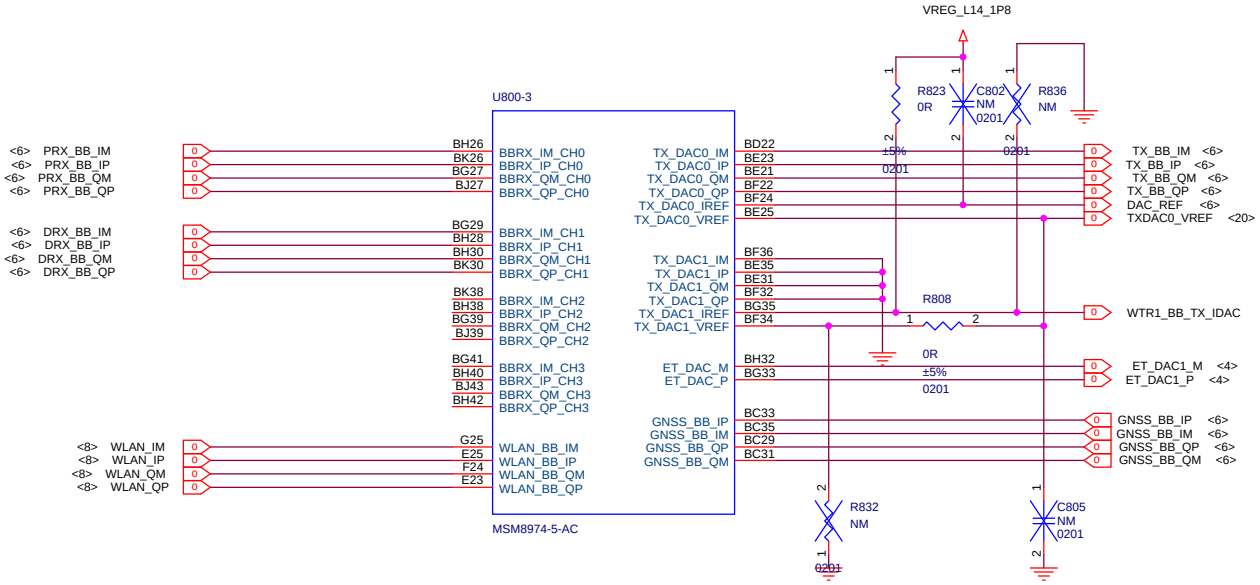

MSM8974 (4 OF 8) - MSM8974 RF INTERFACE

Title	X5	
Size A3	Document Number <Doc>	Rev P0
Date: Wednesday, April 08, 2015	Sheet 14 of 32	

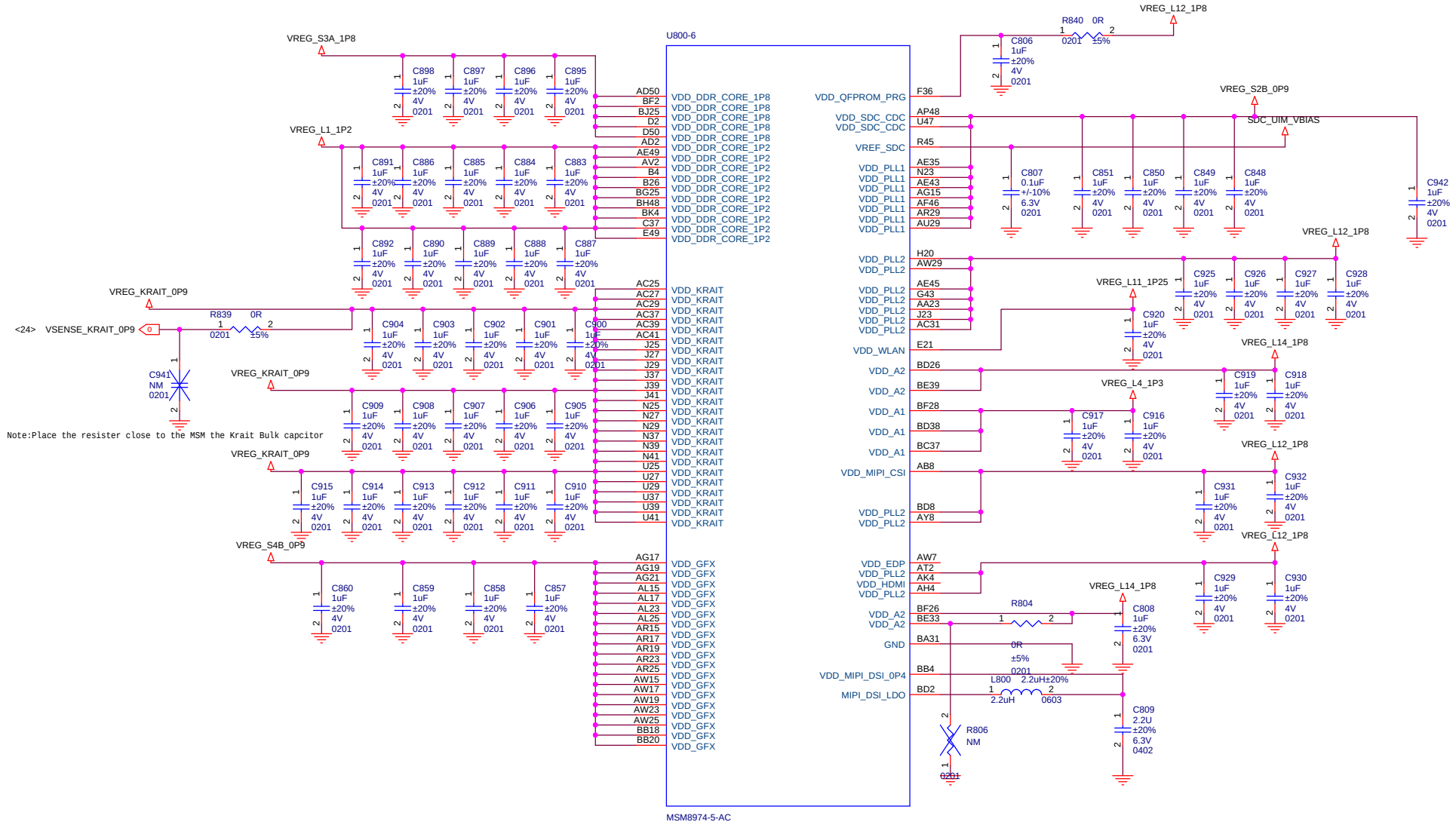

MSM8974 (5 OF 8) - MSM8974 POWER1

Title	X5	
Size A3	Document Number <Doc>	Rev P0
Date: Wednesday, April 08, 2015	Sheet 15 of 32	

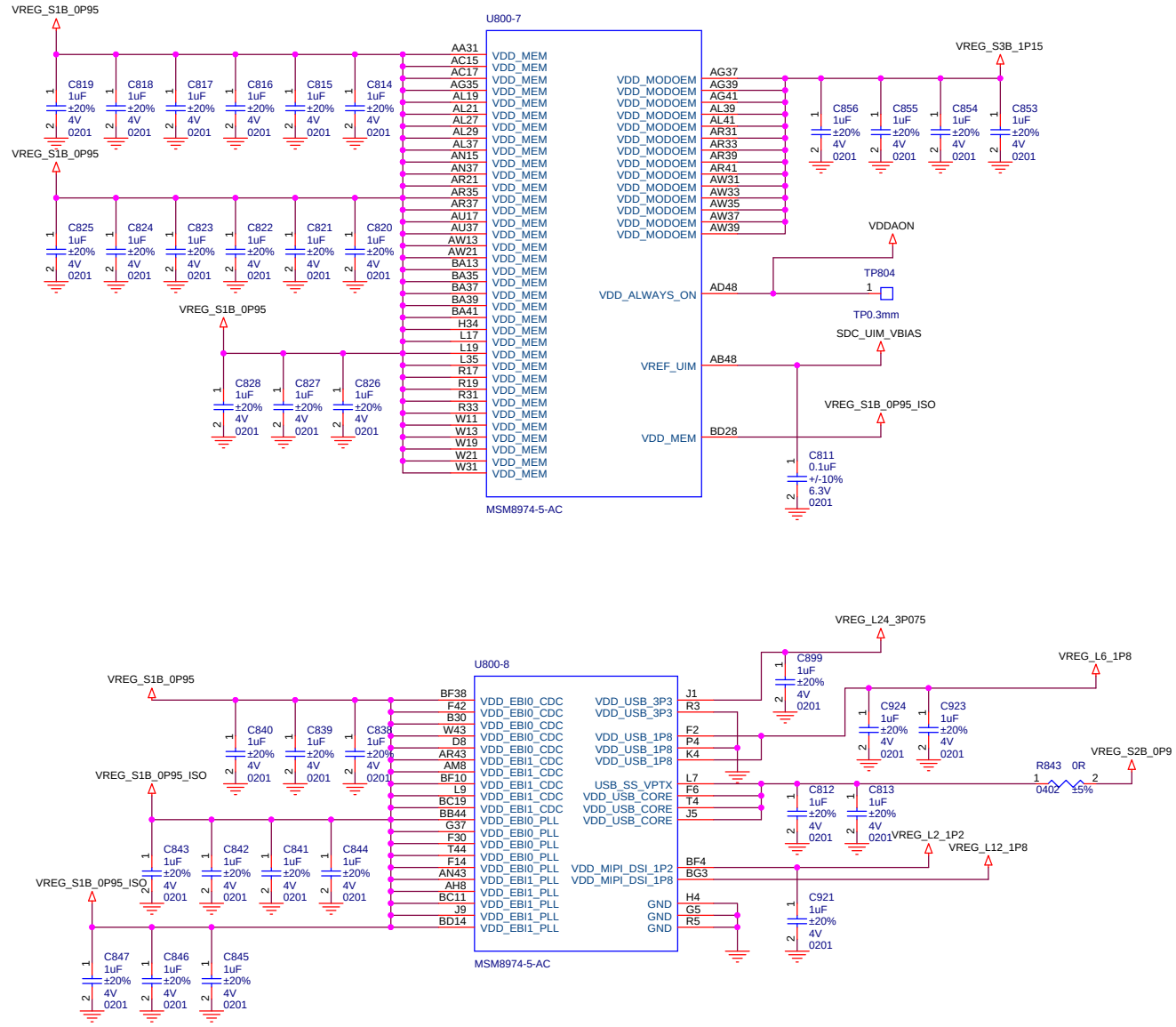

MSM8974 (6 OF 8) - MSM8974 POWER2

Title	X5	
Size A3	Document Number <Doc>	Rev P0
Date: Wednesday, April 08, 2015	Sheet 16 of 32	

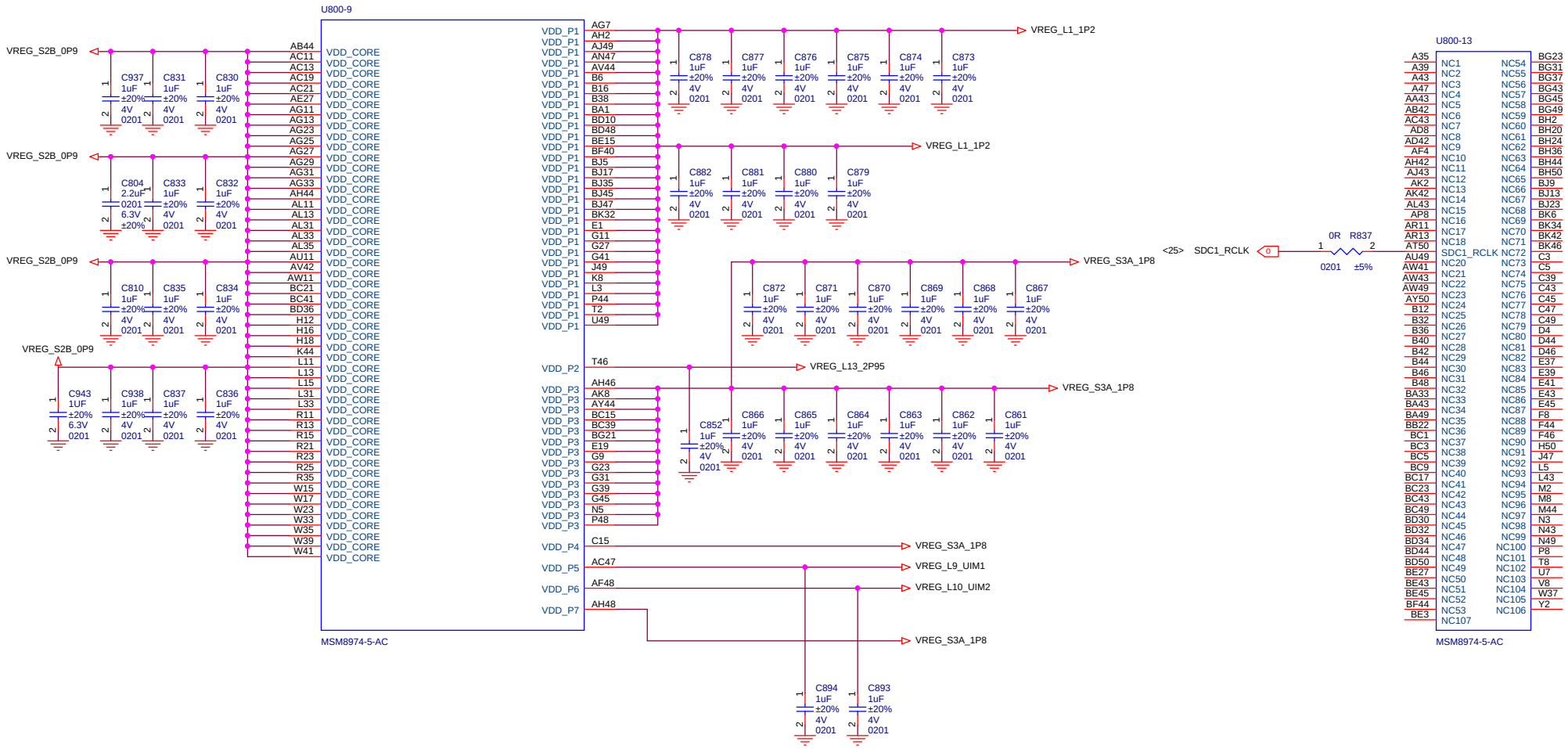

MSM8960 (6 OF 8) - MSM8974 POWER3

Title	X5	
Size A3	Document Number <Doc>	Rev P0
Date: Wednesday, April 08, 2015	Sheet 17 of 32	

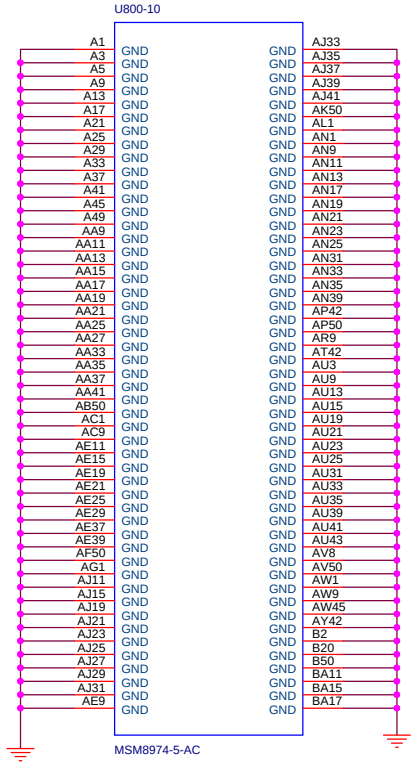

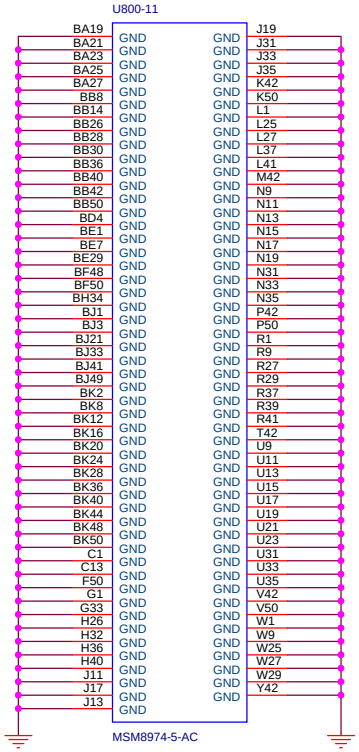

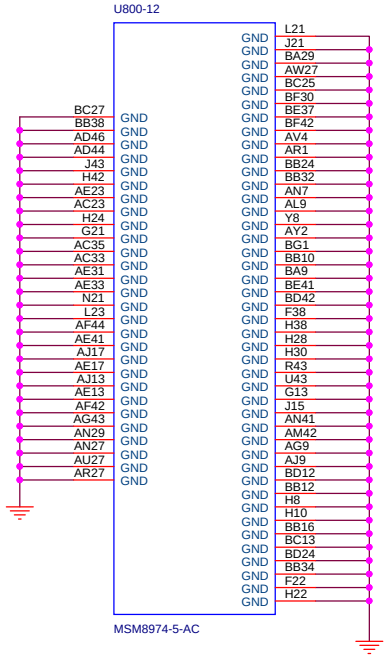

MSM8974 (8 OF 8) - MSM8974 GND

Title	X5	
Size A3	Document Number <Doc>	Rev P0
Date: Wednesday, April 08, 2015	Sheet 18 of 32	

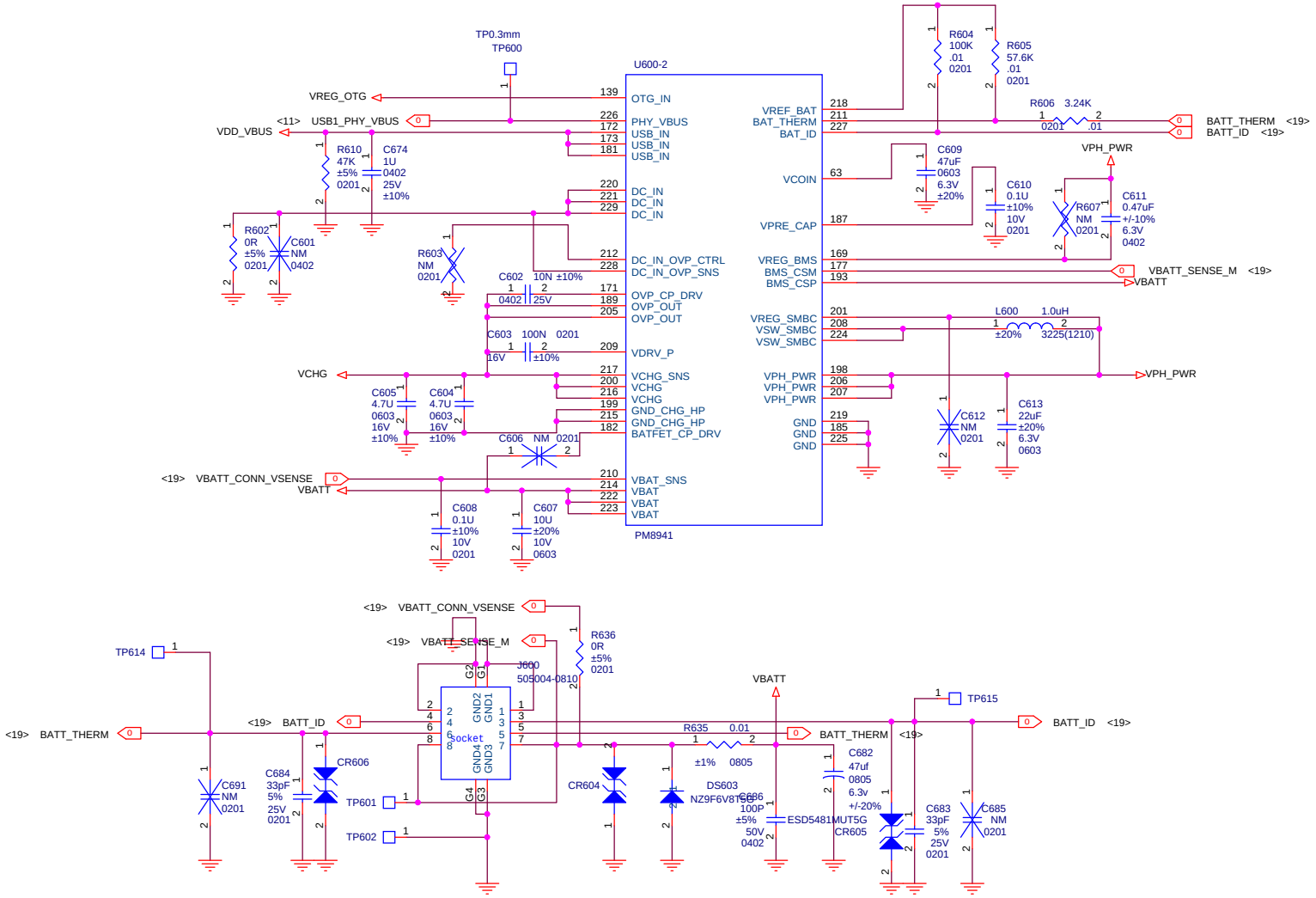

PM8941(1 OF 5) - CHARGING

Title	X5	
Size A3	Document Number <Doc>	Rev P0
Date: Wednesday, April 08, 2015	Sheet 19 of 32	

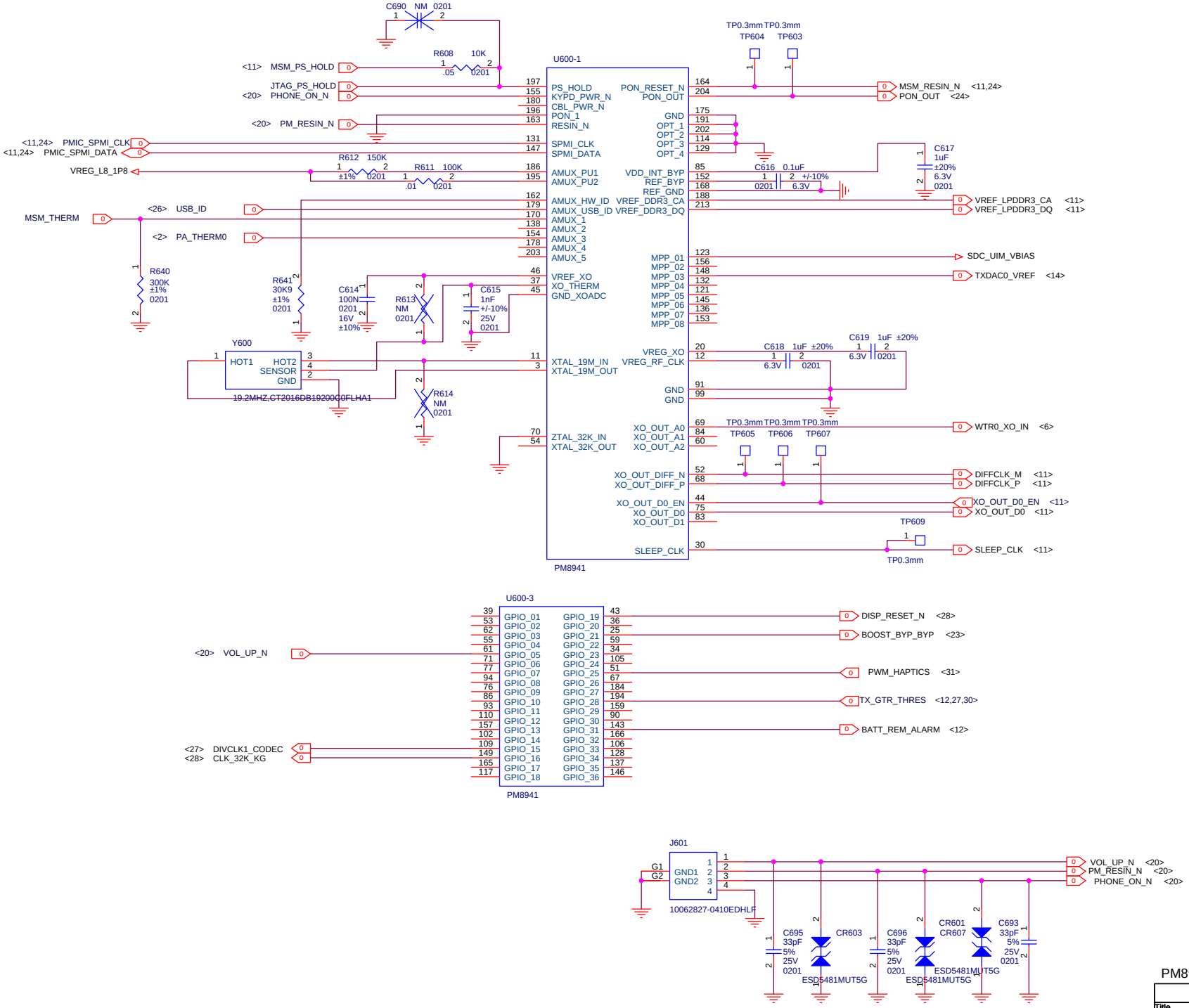

PM8941(2 OF 5)-AMUX,CLK,GPIO

Title	X5	
Size A3	Document Number <Doc>	Rev P0
Date: Wednesday, April 08, 2015	Sheet 20 of 32	

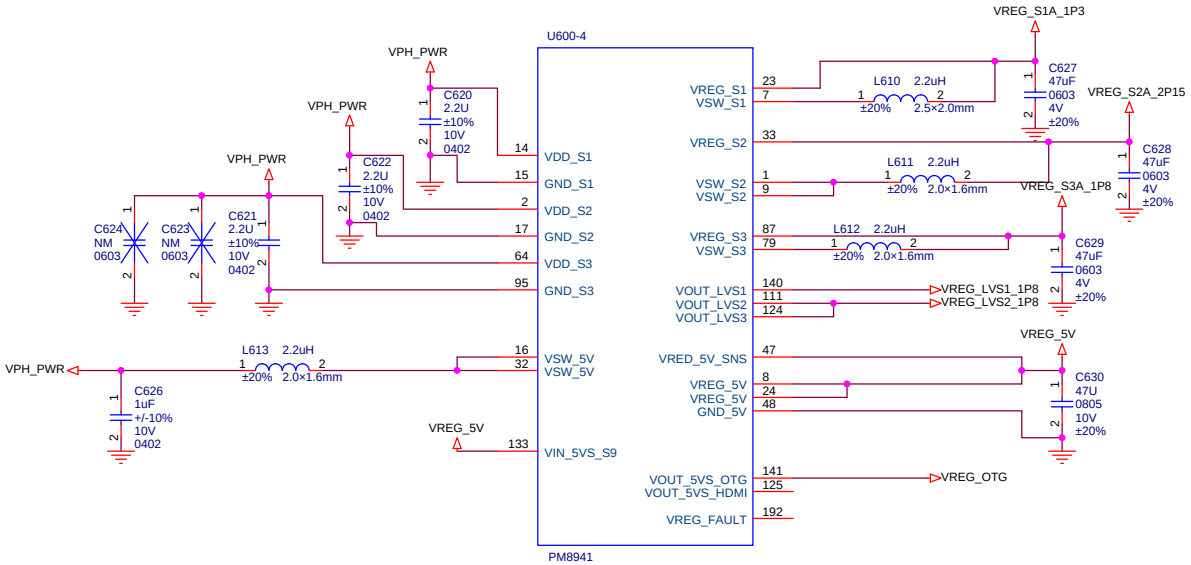

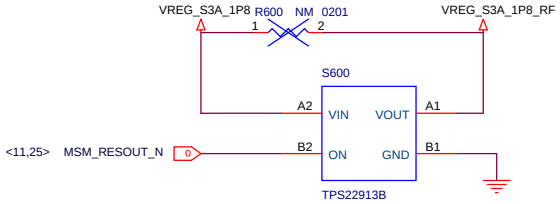

PM8941(3 OF 5) - SMPS

Title	X5	
Size A3	Document Number <Doc>	Rev P0
Date: Wednesday, April 08, 2015	Sheet 21 of 32	

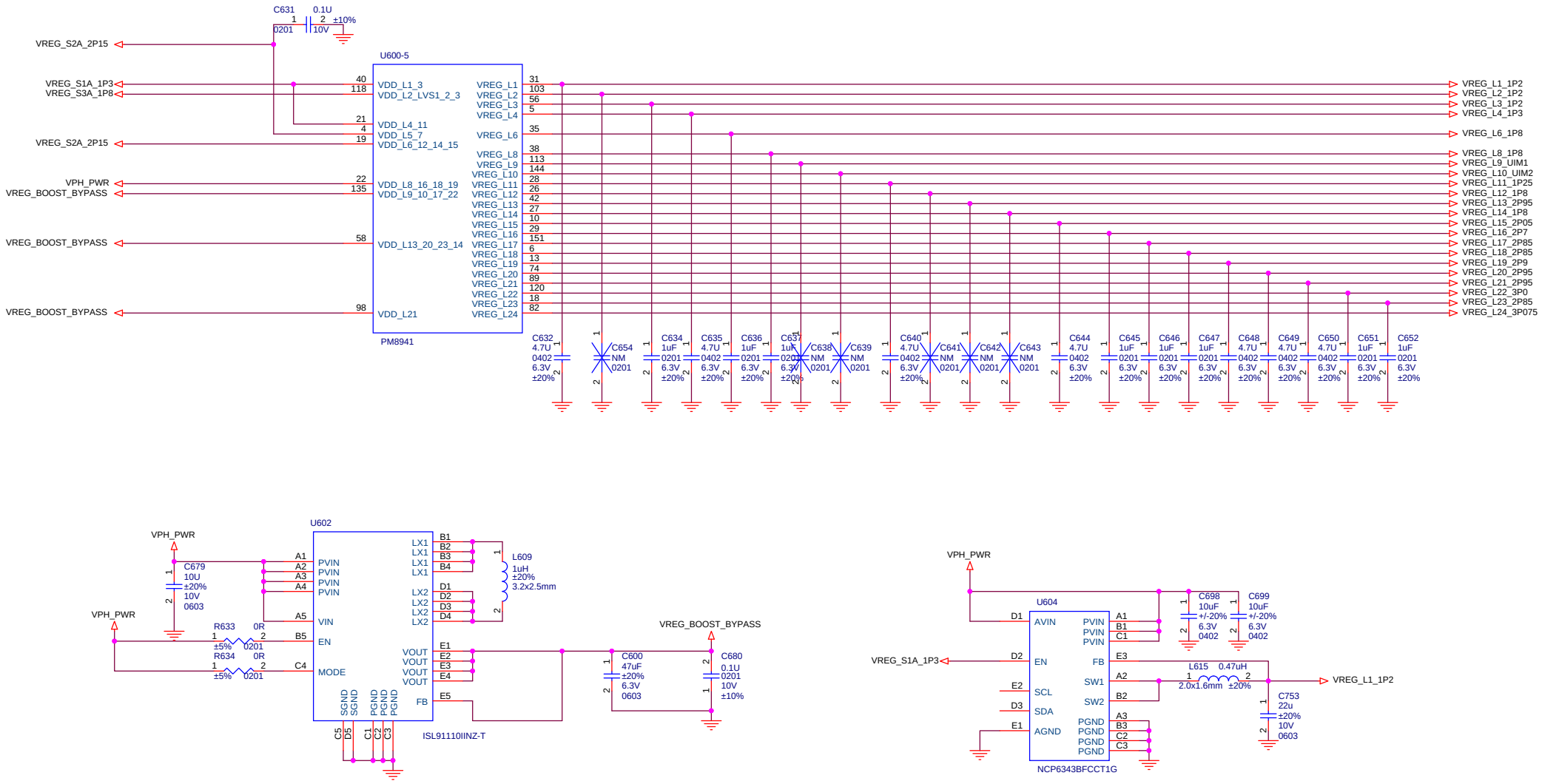

PM8941(4 OF 5) - LDO

Title	X5	
Size A3	Document Number <Doc>	Rev P0
Date: Wednesday, April 08, 2015	Sheet 22 of 32	

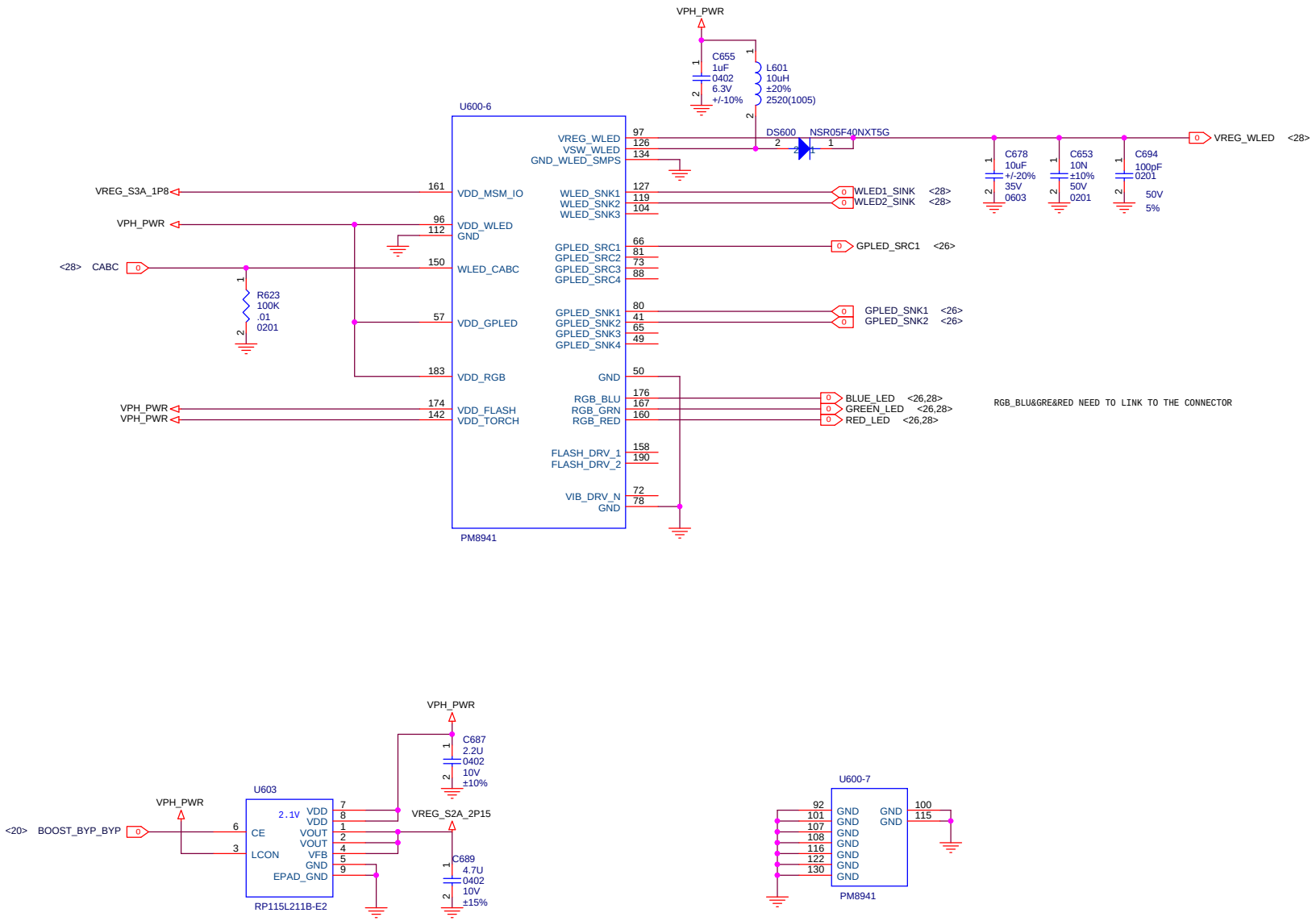

PM8941(5 OF 5) - LED&GND

Title	X5	
Size A3	Document Number <Doc>	Rev P0
Date: Wednesday, April 08, 2015	Sheet 23 of 32	

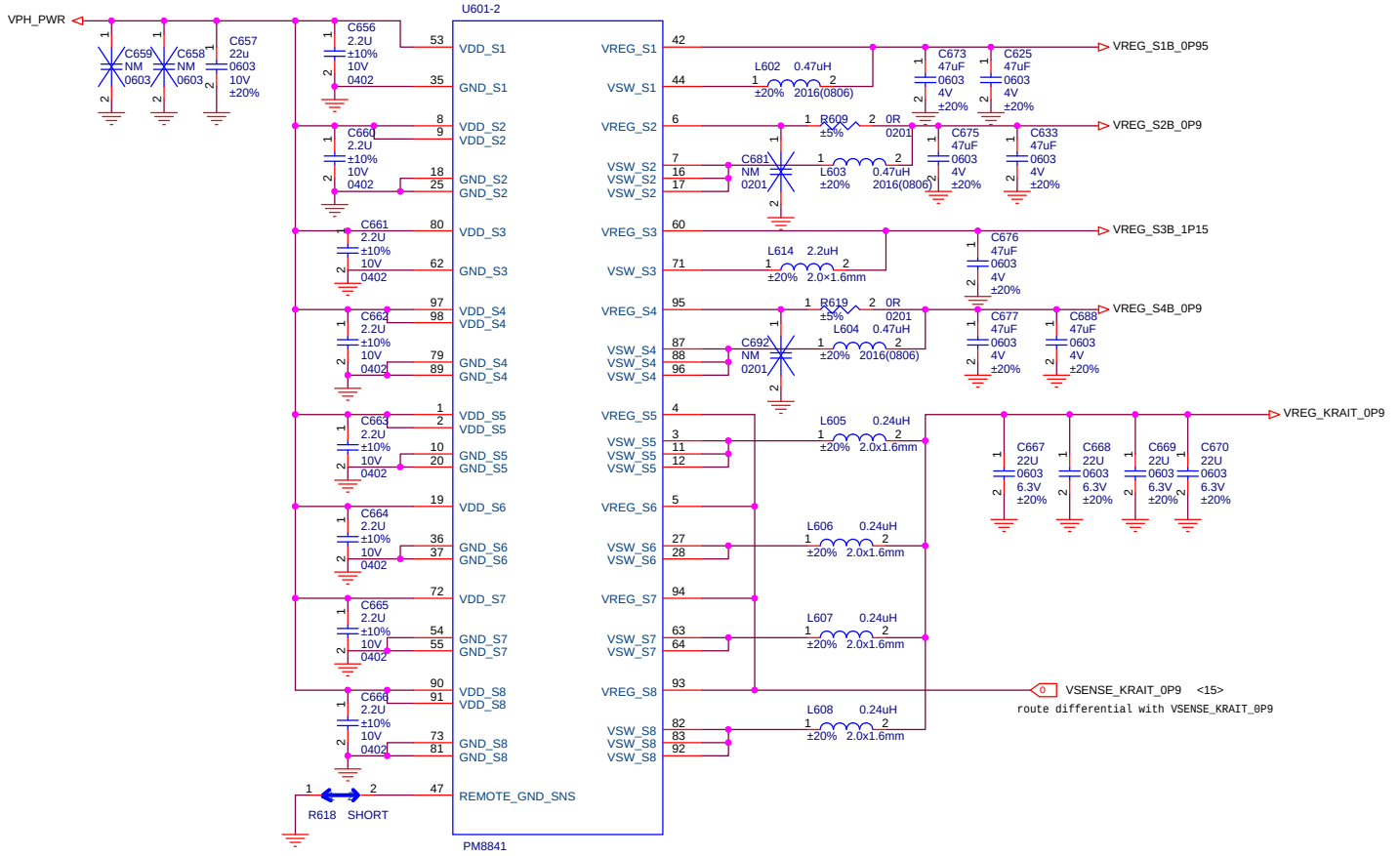

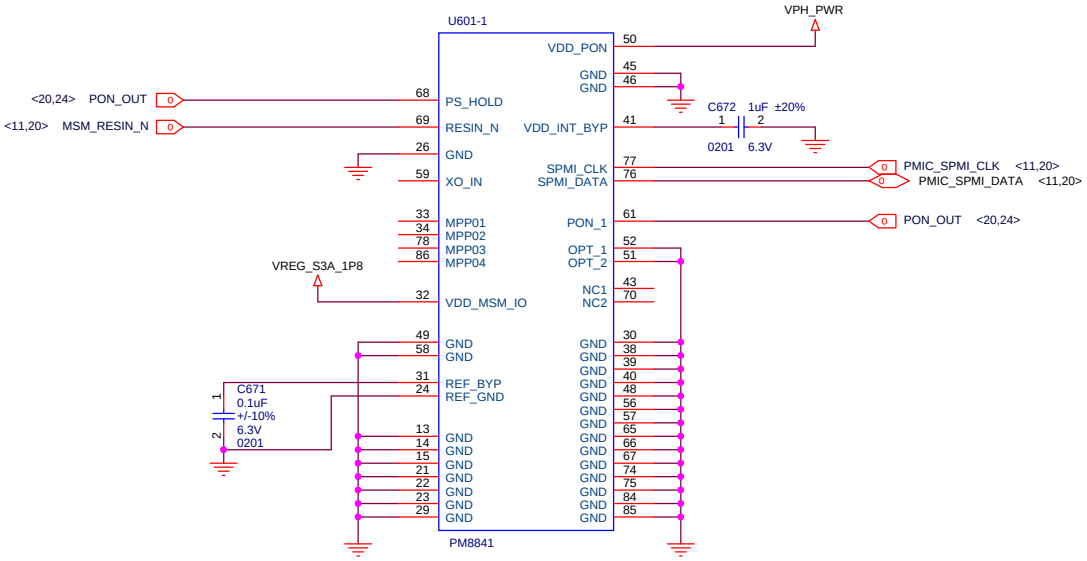

PM8841 - CONTROL AND VREG

Title	X5	
Size A3	Document Number <Doc>	Rev P0
Date: Wednesday, April 08, 2015	Sheet 24 of 32	

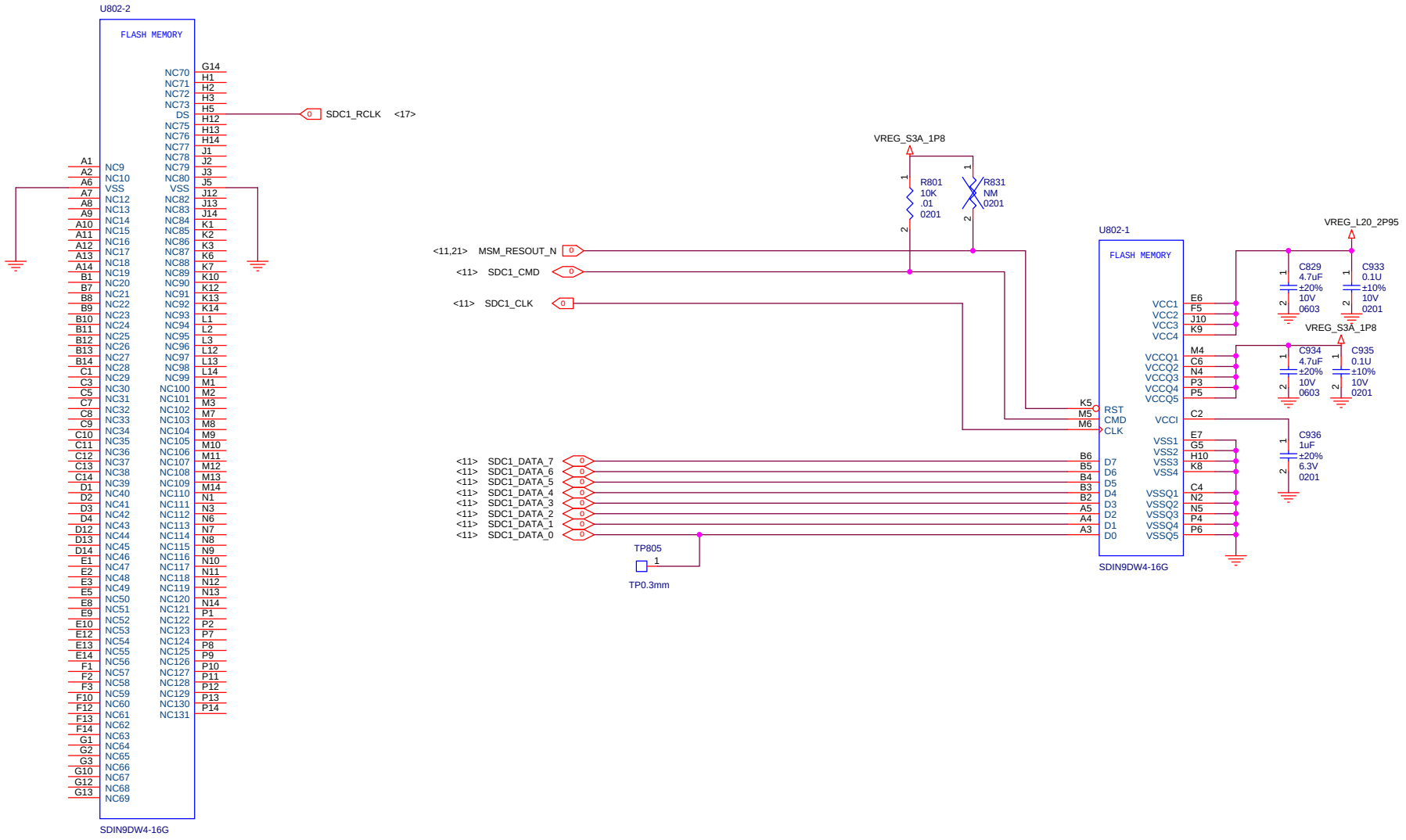

MEMORY

Title	X5		
Size A3	Document Number <Doc>		Rev P0
Date: Wednesday, April 08, 2015	Sheet 25 of 32		

HANDSET

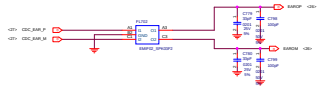

AUX Mic

HEADSET

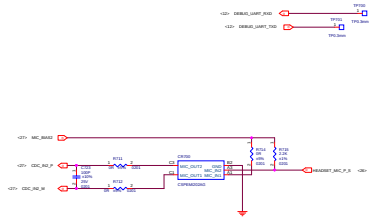

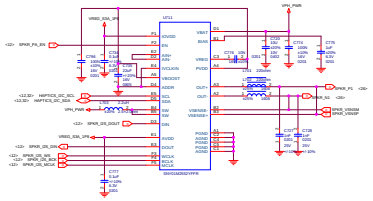

Connector

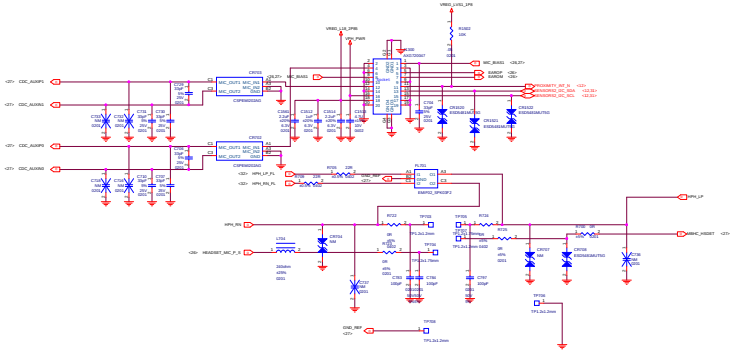

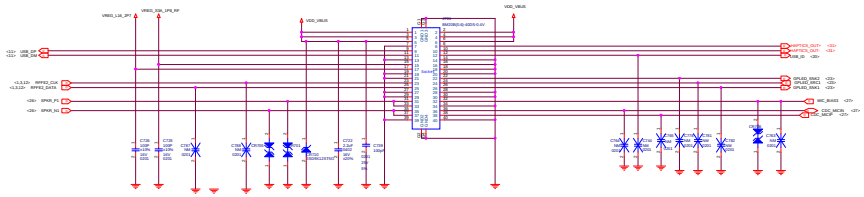

Voice Processer

Title			
Size	Document Number		Rev
A4	<Doc>		P0
Date:	Sunday, July 28, 2013	Sheet	30 of 30

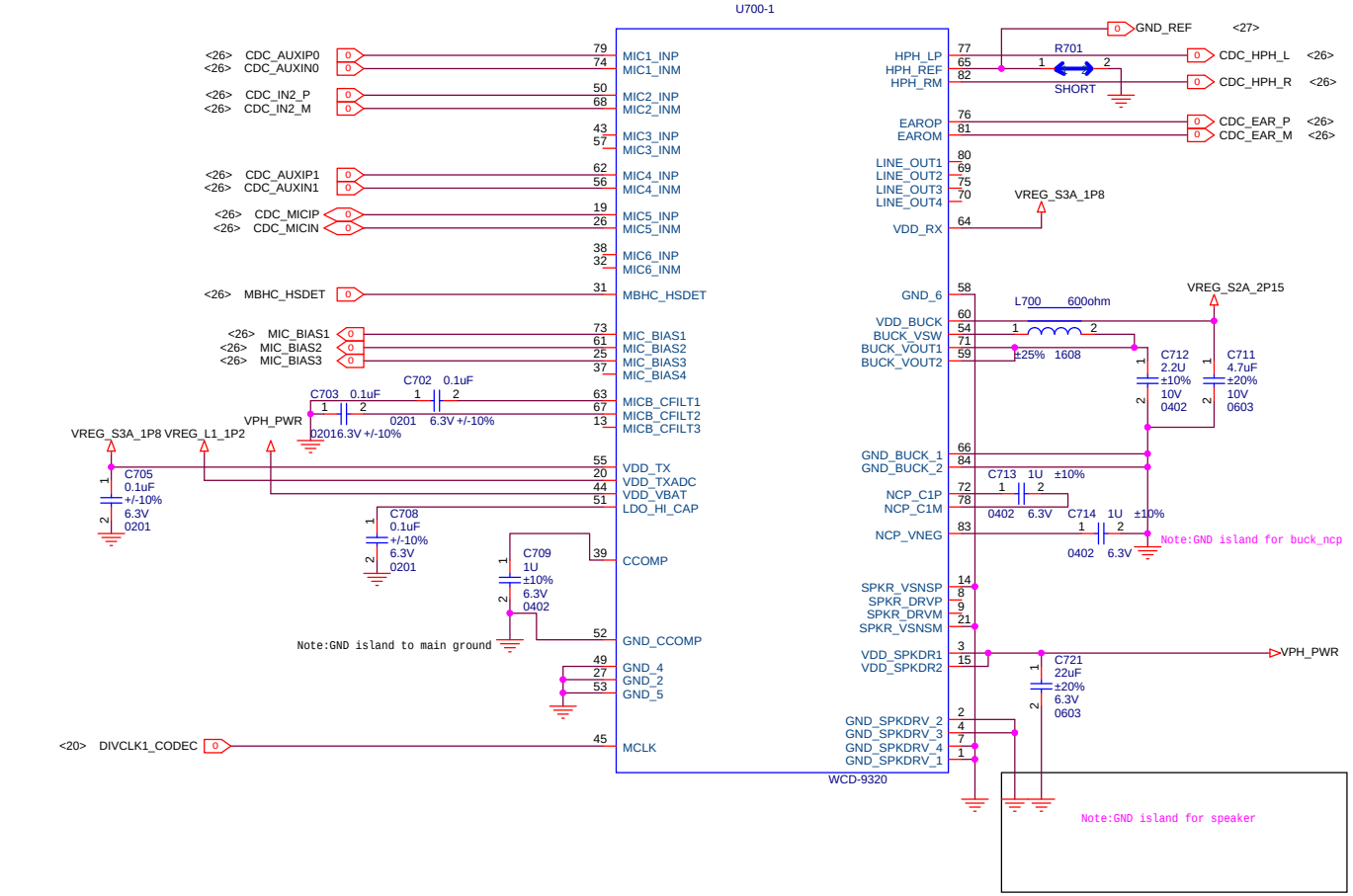

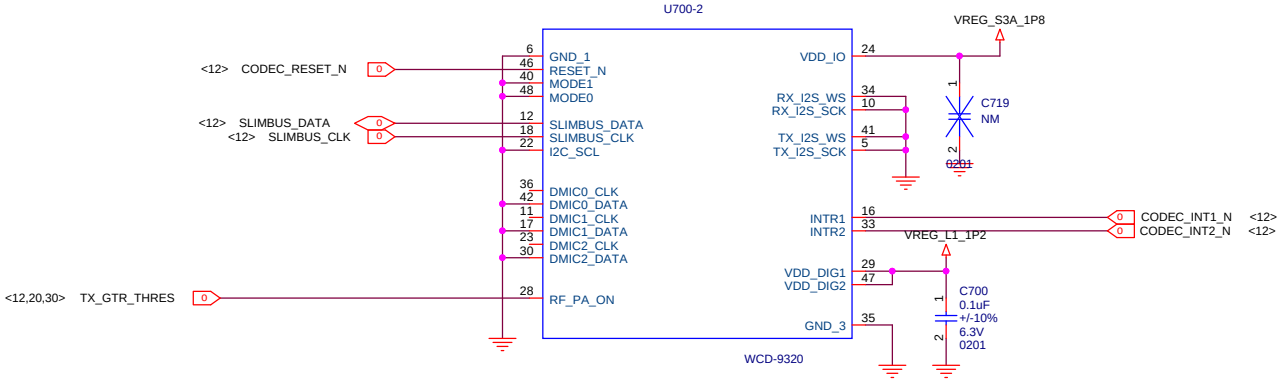

WCD9320

Title	X5	
Size A3	Document Number <Doc>	Rev P0
Date: Wednesday, April 08, 2015	Sheet 27 of 32	

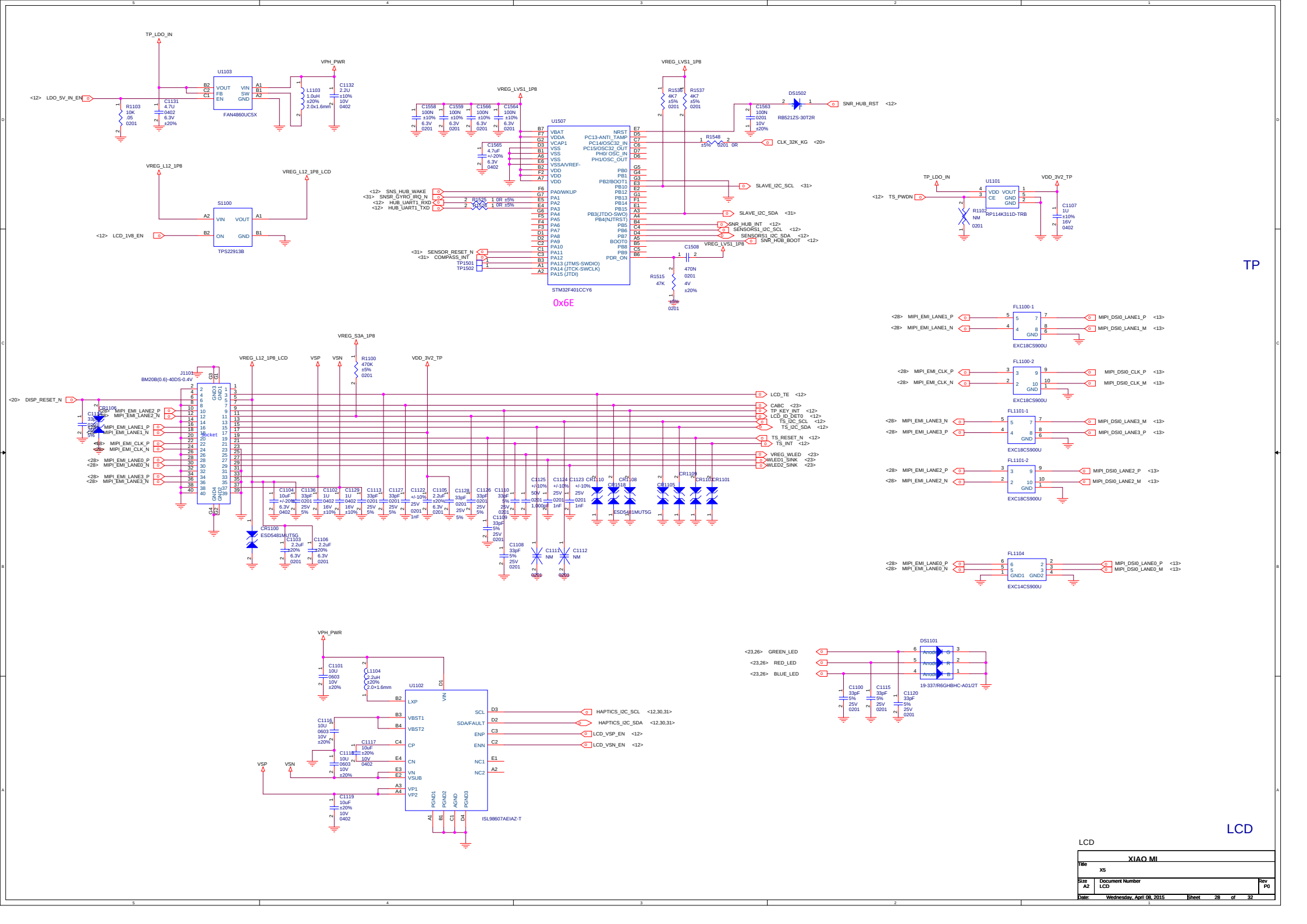
TP
LCD
0x6E
U1103
FAN4860UC5X
S1100
TPS22913B
U1507
STM32F401CCY6
U1101
RP114K311D-TRB
FL1100-1
FL1100-2
FL1101-1
FL1101-2
FL1104
EXC18CS900U
EXC14CS900U
J101
BM20B(0.6)-40DS-0.4V
DS1502
RB521ZS-30T2R
DS1101
19-337/R6GHBHC-A01/2T
U1102
ISL98607AEIAZ-T
CR1100
ESD5481MUT5G
TP_LDO_IN
VPH_PWR
VREG_LVS1_1P8
VREG_L12_1P8
VREG_L12_1P8_LCD
VREG_S3A_1P8
VDD_3V2_TP
VSP
VSN
LDO_5V_IN_EN
LCD_1V8_EN
SNR_HUB_RST
CLK_32K_KG
SLAVE_I2C_SCL
SLAVE_I2C_SDA
SNR_HUB_INT
SENSORS1_I2C_SCL
SENSORS1_I2C_SDA
SNR_HUB_BOOT
SNS_HUB_WAKE
SNSR_GYRO_IRQ_N
HUB_UART1_RXD
HUB_UART1_TXD
SENSOR_RESET_N
COMPASS_INT
TS_PWDN
DISP_RESET_N
LCD_TE
CABC
TP_KEY_INT
LCD_ID_DET0
TS_I2C_SCL
TS_I2C_SDA
TS_RESET_N
TS_INT
VREG_WLED
WLED1_SINK
WLED2_SINK
MIPI_EMI_LANE1_P
MIPI_EMI_LANE1_N
MIPI_EMI_CLK_P
MIPI_EMI_CLK_N
MIPI_EMI_LANE3_N
MIPI_EMI_LANE3_P
MIPI_EMI_LANE2_P
MIPI_EMI_LANE2_N
MIPI_EMI_LANE0_P
MIPI_EMI_LANE0_N
MIPI_DSI0_LANE1_P
MIPI_DSI0_LANE1_M
MIPI_DSI0_CLK_P
MIPI_DSI0_CLK_M
MIPI_DSI0_LANE3_M
MIPI_DSI0_LANE3_P
MIPI_DSI0_LANE2_P
MIPI_DSI0_LANE2_M
MIPI_DSI0_LANE0_P
MIPI_DSI0_LANE0_M
GREEN_LED
RED_LED
BLUE_LED
HAPTICS_I2C_SCL
HAPTICS_I2C_SDA
LCD_VSP_EN
LCD_VSN_EN
XIAO MI
X5
Document Number
LCD
Rev
P0
Size
A2
Date: Wednesday, April 08, 2015
Sheet 28 of 32

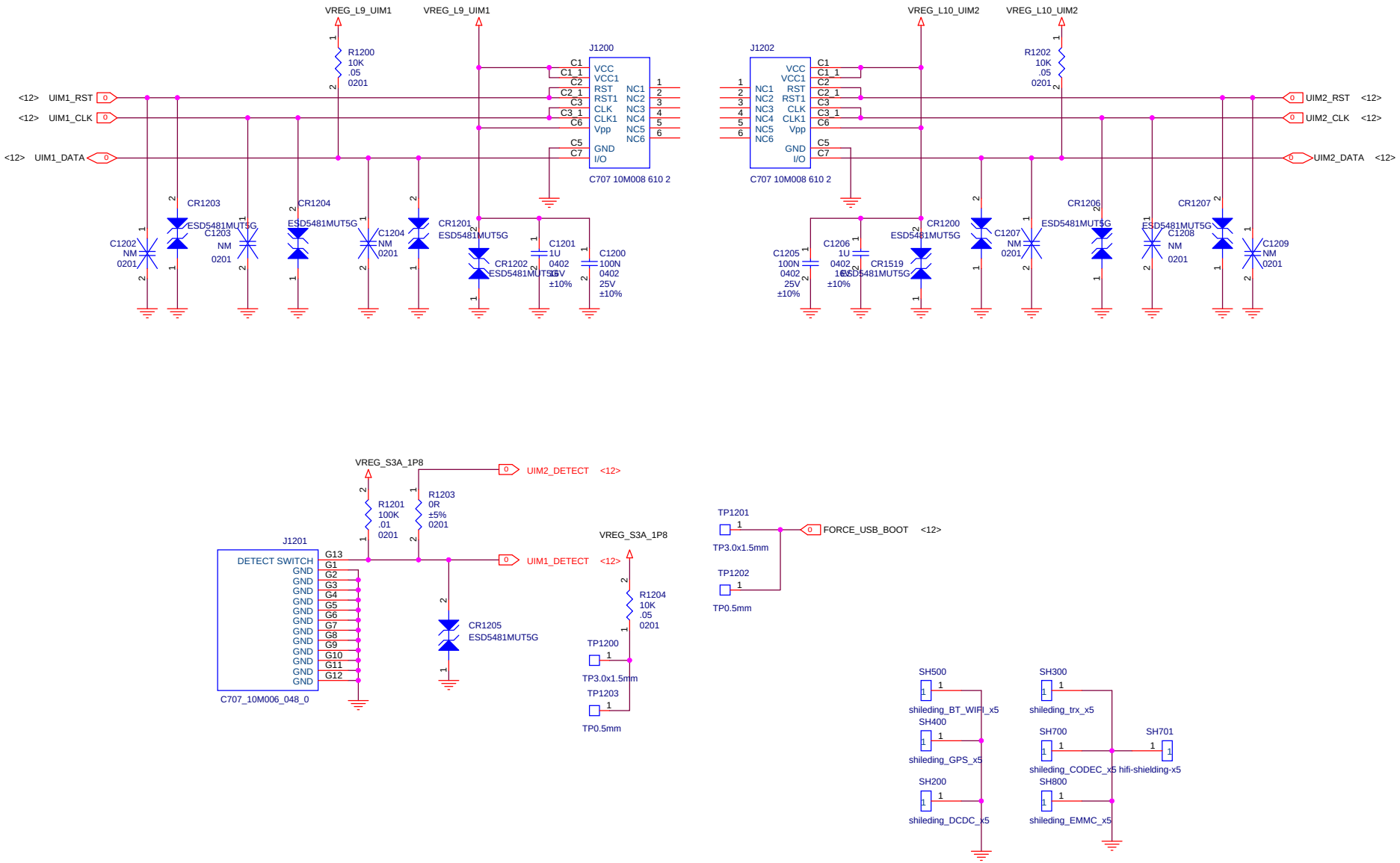

SD&SIM CONNECTOR

XIAO MI		
Title	X5	
Size A3	Document Number SD&SIM CONNECTOR	Rev P0
Date: Wednesday, April 08, 2015	Sheet 29 of 32	

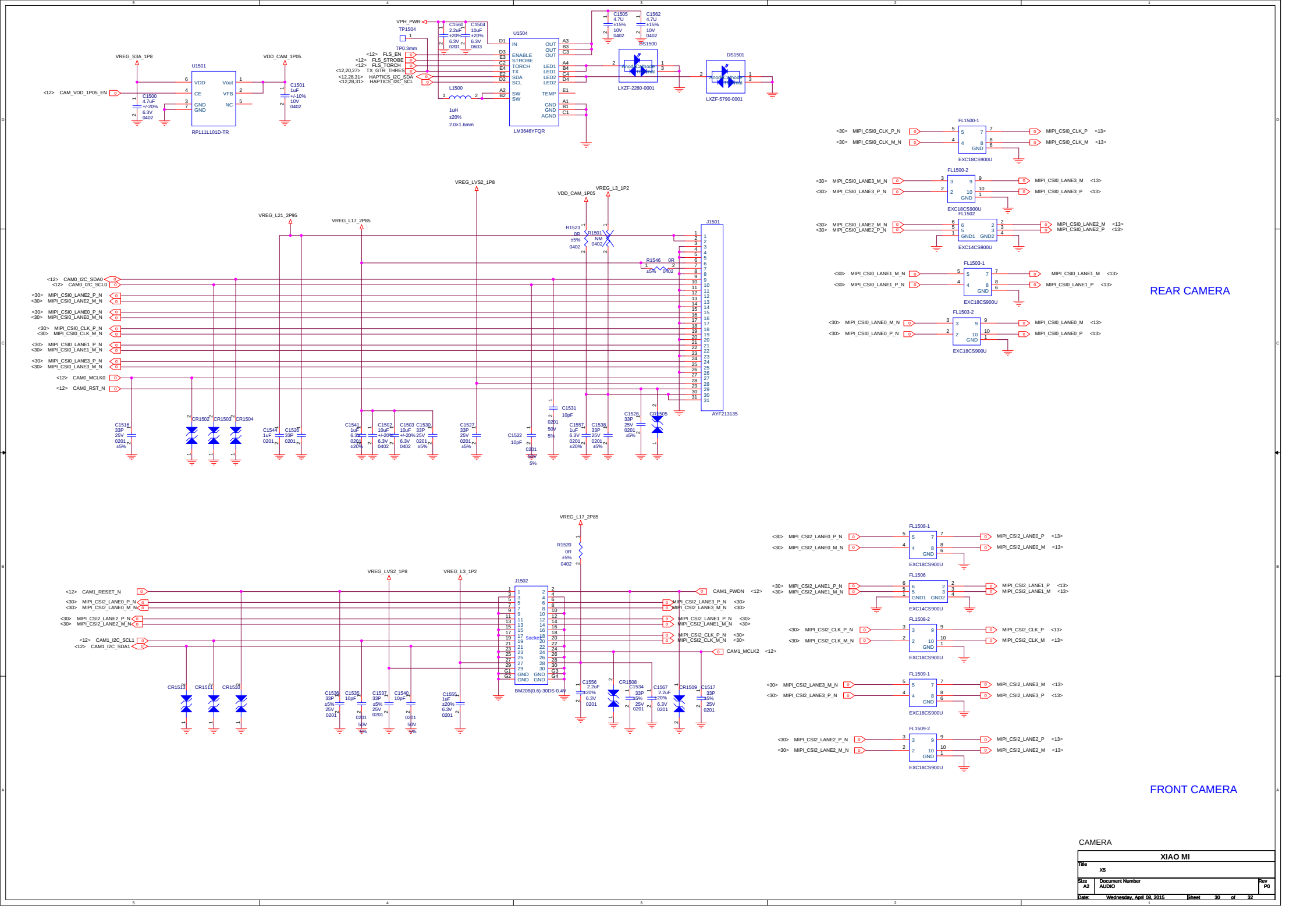
U1501
RP111L101D-TR
VREG_S3A_1P8
VDD_CAM_1P05
<12> CAM_VDD_1P05_EN
C1500 4.7uF +/-20% 6.3V 0402
C1501 1uF +/-10% 10V 0402
VPH_PWR
TP1504
TP0.3mm
C1560 2.2uF ±20% 6.3V 0201
C1504 10uF ±20% 6.3V 0603
U1504
LM3646YFQR
<12> FLS_EN
<12> FLS_STROBE
<12> FLS_TORCH
<12,20,27> TX_GTR_THRES
<12,28,31> HAPTICS_I2C_SDA
<12,28,31> HAPTICS_I2C_SCL
L1500
1uH ±20% 2.0×1.6mm
C1505 4.7U ±15% 10V 0402
C1562 4.7U ±15% 10V 0402
BS1500
LXZF-2280-0001
DS1501
LXZF-5790-0001
FL1500-1
EXC18CS900U
<30> MIPI_CSI0_CLK_P_N
<30> MIPI_CSI0_CLK_M_N
MIPI_CSI0_CLK_P <13>
MIPI_CSI0_CLK_M <13>
FL1500-2
EXC18CS900U
<30> MIPI_CSI0_LANE3_M_N
<30> MIPI_CSI0_LANE3_P_N
MIPI_CSI0_LANE3_M <13>
MIPI_CSI0_LANE3_P <13>
FL1502
EXC14CS900U
<30> MIPI_CSI0_LANE2_M_N
<30> MIPI_CSI0_LANE2_P_N
MIPI_CSI0_LANE2_M <13>
MIPI_CSI0_LANE2_P <13>
FL1503-1
EXC18CS900U
<30> MIPI_CSI0_LANE1_M_N
<30> MIPI_CSI0_LANE1_P_N
MIPI_CSI0_LANE1_M <13>
MIPI_CSI0_LANE1_P <13>
FL1503-2
EXC18CS900U
<30> MIPI_CSI0_LANE0_M_N
<30> MIPI_CSI0_LANE0_P_N
MIPI_CSI0_LANE0_M <13>
MIPI_CSI0_LANE0_P <13>
REAR CAMERA
VREG_L21_2P95
VREG_L17_2P85
VREG_LVS2_1P8
VDD_CAM_1P05
VREG_L3_1P2
R1523 0R ±5% 0402
R1501 NM 0402
R1546 0R ±5% 0402
J1501
AYF213135
<12> CAM0_I2C_SDA0
<12> CAM0_I2C_SCL0
<30> MIPI_CSI0_LANE2_P_N
<30> MIPI_CSI0_LANE2_M_N
<30> MIPI_CSI0_LANE0_P_N
<30> MIPI_CSI0_LANE0_M_N
<30> MIPI_CSI0_CLK_P_N
<30> MIPI_CSI0_CLK_M_N
<30> MIPI_CSI0_LANE1_P_N
<30> MIPI_CSI0_LANE1_M_N
<30> MIPI_CSI0_LANE3_P_N
<30> MIPI_CSI0_LANE3_M_N
<12> CAM0_MCLK0
<12> CAM0_RST_N
C1516 33P 25V 0201 ±5%
CR1502
CR1503
CR1504
C1544 1uF 6.3V 0201 ±20%
C1526 33P 25V 0201 ±5%
C1541 1uF 6.3V 0201 ±20%
C1502 10uF +/-20% 6.3V 0402
C1503 10uF +/-20% 6.3V 0402
C1530 33P 25V 0201 ±5%
C1527 33P 25V 0201 ±5%
C1522 10pF 0201 50V 5%
C1531 10pF 0201 50V 5%
C1557 1uF 6.3V 0201 ±20%
C1538 33P 25V 0201 ±5%
C1528 33P 25V 0201 ±5%
CR1505
VREG_L17_2P85
R1520 0R ±5% 0402
VREG_LVS2_1P8
VREG_L3_1P2
J1502
BM20B(0.6)-30DS-0.4V
<12> CAM1_RESET_N
<30> MIPI_CSI2_LANE0_P_N
<30> MIPI_CSI2_LANE0_M_N
<30> MIPI_CSI2_LANE2_P_N
<30> MIPI_CSI2_LANE2_M_N
<12> CAM1_I2C_SCL1
<12> CAM1_I2C_SDA1
CAM1_PWDN <12>
MIPI_CSI2_LANE3_P_N <30>
MIPI_CSI2_LANE3_M_N <30>
MIPI_CSI2_LANE1_P_N <30>
MIPI_CSI2_LANE1_M_N <30>
MIPI_CSI2_CLK_P_N <30>
MIPI_CSI2_CLK_M_N <30>
CAM1_MCLK2 <12>
CR1513
CR1511
CR1509
C1536 33P ±5% 25V 0201
C1535 10pF 0201 50V 5%
C1537 33P ±5% 25V 0201
C1540 10pF 0201 50V 5%
C1555 1uF ±20% 6.3V 0201
C1556 2.2uF ±20% 6.3V 0201
CR1508
C1534 33P ±5% 25V 0201
C1567 2.2uF ±20% 6.3V 0201
CR1509
C1517 33P ±5% 25V 0201
FL1508-1
EXC18CS900U
<30> MIPI_CSI2_LANE0_P_N
<30> MIPI_CSI2_LANE0_M_N
MIPI_CSI2_LANE0_P <13>
MIPI_CSI2_LANE0_M <13>
FL1506
EXC14CS900U
<30> MIPI_CSI2_LANE1_P_N
<30> MIPI_CSI2_LANE1_M_N
MIPI_CSI2_LANE1_P <13>
MIPI_CSI2_LANE1_M <13>
FL1508-2
EXC18CS900U
<30> MIPI_CSI2_CLK_P_N
<30> MIPI_CSI2_CLK_M_N
MIPI_CSI2_CLK_P <13>
MIPI_CSI2_CLK_M <13>
FL1509-1
EXC18CS900U
<30> MIPI_CSI2_LANE3_M_N
<30> MIPI_CSI2_LANE3_P_N
MIPI_CSI2_LANE3_M <13>
MIPI_CSI2_LANE3_P <13>
FL1509-2
EXC18CS900U
<30> MIPI_CSI2_LANE2_P_N
<30> MIPI_CSI2_LANE2_M_N
MIPI_CSI2_LANE2_P <13>
MIPI_CSI2_LANE2_M <13>
FRONT CAMERA
CAMERA
XIAO MI
Title
X5
Size A2
Document Number AUDIO
Rev P0
Date: Wednesday, April 08, 2015
Sheet 30 of 32

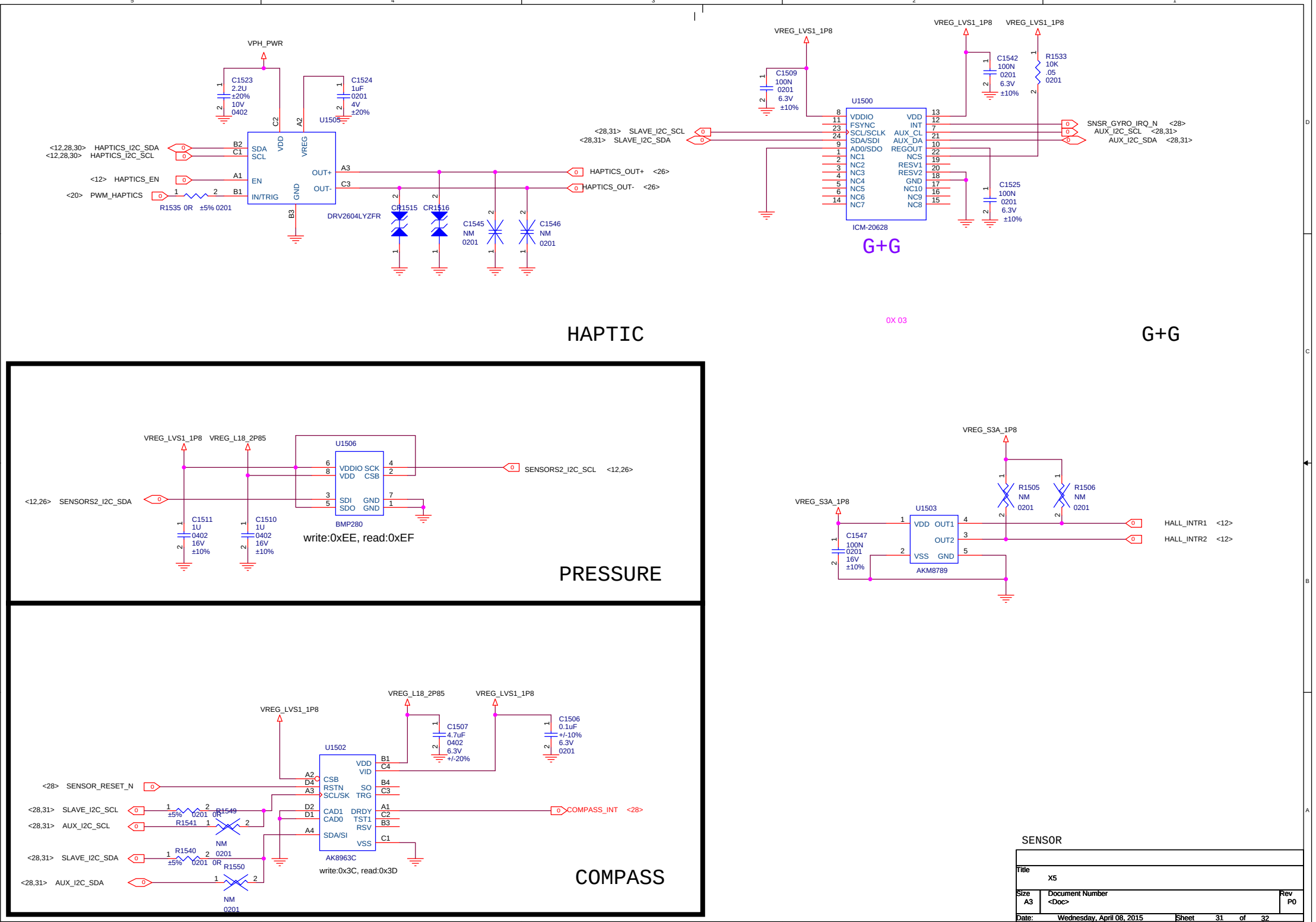
VPH_PWR
C1523
2.2U
±20%
10V
0402
C1524
1uF
0201
4V
±20%
U1505
<12,28,30> HAPTICS_I2C_SDA
<12,28,30> HAPTICS_I2C_SCL
<12> HAPTICS_EN
<20> PWM_HAPTICS
R1535 0R ±5% 0201
SDA
SCL
EN
IN/TRIG
VDD
VREG
GND
OUT+
OUT-
DRV2604LYZFR
CR1515
CR1516
C1545
NM
0201
C1546
NM
0201
HAPTICS_OUT+ <26>
HAPTICS_OUT- <26>
HAPTIC
VREG_LVS1_1P8
C1509
100N
0201
6.3V
±10%
U1500
<28,31> SLAVE_I2C_SCL
<28,31> SLAVE_I2C_SDA
VDDIO
FSYNC
SCL/SCLK
SDA/SDI
AD0/SDO
NC1
NC2
NC3
NC4
NC5
NC6
NC7
VDD
INT
AUX_CL
AUX_DA
REGOUT
NCS
RESV1
RESV2
GND
NC10
NC9
NC8
ICM-20628
C1542
100N
0201
6.3V
±10%
R1533
10K
.05
0201
SNSR_GYRO_IRQ_N <28>
AUX_I2C_SCL <28,31>
AUX_I2C_SDA <28,31>
C1525
100N
0201
6.3V
±10%
G+G
0X 03
G+G
VREG_LVS1_1P8
VREG_L18_2P85
U1506
VDDIO SCK
VDD CSB
SDI GND
SDO GND
BMP280
<12,26> SENSORS2_I2C_SDA
SENSORS2_I2C_SCL <12,26>
C1511
1U
0402
16V
±10%
C1510
1U
0402
16V
±10%
write:0xEE, read:0xEF
PRESSURE
VREG_S3A_1P8
R1505
NM
0201
R1506
NM
0201
U1503
VDD OUT1
OUT2
VSS GND
AKM8789
C1547
100N
0201
16V
±10%
HALL_INTR1 <12>
HALL_INTR2 <12>
VREG_L18_2P85
VREG_LVS1_1P8
C1507
4.7uF
0402
6.3V
+/-20%
C1506
0.1uF
+/-10%
6.3V
0201
U1502
VDD
VID
CSB
RSTN
SCL/SK
SO
TRG
CAD1
CAD0
DRDY
TST1
RSV
SDA/SI
VSS
AK8963C
<28> SENSOR_RESET_N
<28,31> SLAVE_I2C_SCL
<28,31> AUX_I2C_SCL
<28,31> SLAVE_I2C_SDA
<28,31> AUX_I2C_SDA
R1549
R1541
R1540
R1550
NM
0201
COMPASS_INT <28>
write:0x3C, read:0x3D
COMPASS
SENSOR
Title
X5
Size
A3
Document Number
<Doc>
Rev
P0
Date: Wednesday, April 08, 2015
Sheet 31 of 32

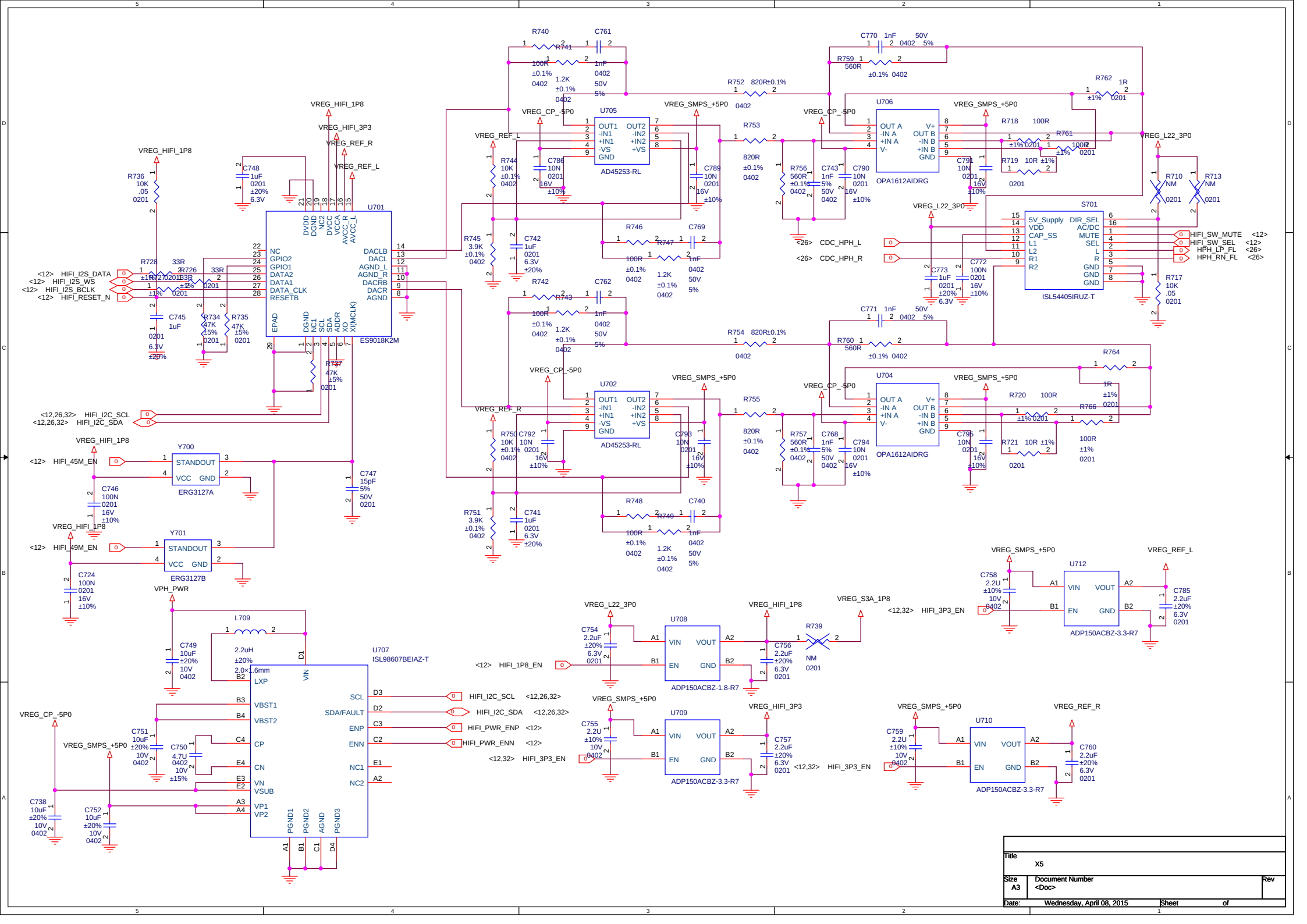
U701
ES9018K2M
U705
AD45253-RL
U702
AD45253-RL
U706
OPA1612AIDRG
U704
OPA1612AIDRG
S701
ISL54405IRUZ-T
Y700
ERG3127A
Y701
ERG3127B
U707
ISL98607BEIAZ-T
U708
ADP150ACBZ-1.8-R7
U709
ADP150ACBZ-3.3-R7
U710
ADP150ACBZ-3.3-R7
U712
ADP150ACBZ-3.3-R7
VREG_HIFI_1P8
VREG_HIFI_3P3
VREG_REF_R
VREG_REF_L
VREG_CP_-5P0
VREG_SMPS_+5P0
VREG_L22_3P0
VPH_PWR
VREG_S3A_1P8
<12> HIFI_I2S_DATA
<12> HIFI_I2S_WS
<12> HIFI_I2S_BCLK
<12> HIFI_RESET_N
<12,26,32> HIFI_I2C_SCL
<12,26,32> HIFI_I2C_SDA
<12> HIFI_45M_EN
<12> HIFI_49M_EN
<26> CDC_HPH_L
<26> CDC_HPH_R
HIFI_SW_MUTE <12>
HIFI_SW_SEL <12>
HPH_LP_FL <26>
HPH_RN_FL <26>
<12> HIFI_1P8_EN
<12,32> HIFI_3P3_EN
HIFI_PWR_ENP <12>
HIFI_PWR_ENN <12>
Title
X5
Size
A3
Document Number
<Doc>
Rev
Date:
Wednesday, April 08, 2015
Sheet
of